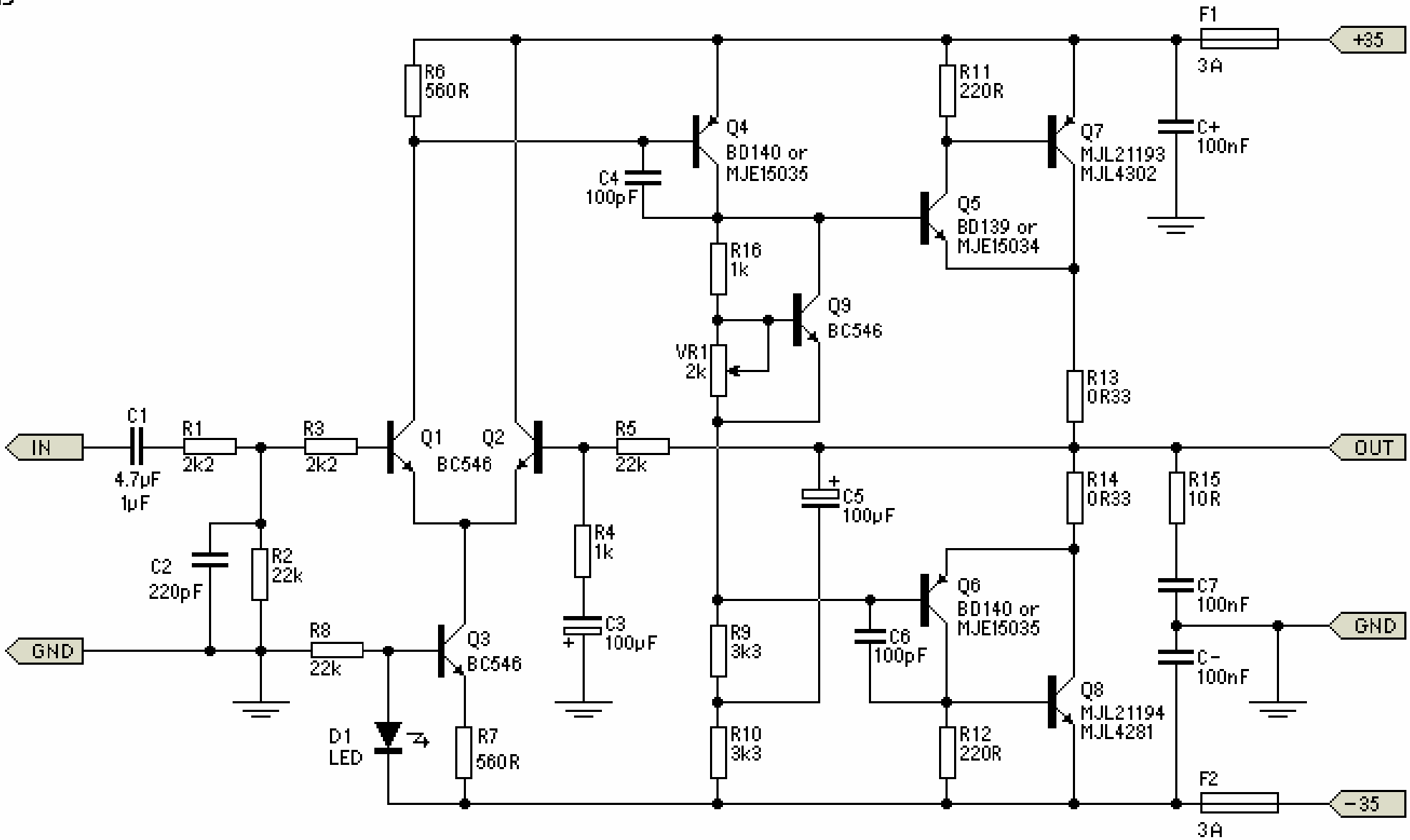
F1
3A
+35
R6
560R
R11
220R
Q4
BD140 or
MJE15035
Q7
MJL21193
MJL4302
C+
100nF
C4
100pF
Q5
BD139 or
MJE15034
R16
1k
Q9
BC546
VR1
2k
R13
0R33
C1
4.7µF
1µF
R1
2k2
R3
2k2
Q1
Q2
BC546
R5
22k
IN
OUT
R14
0R33
R15
10R
C5
100µF
R4
1k
C2
220pF
R2
22k
Q6
BD140 or
MJE15035
C7
100nF
GND
R8
22k
Q3
BC546
C3
100µF
R9
3k3
C6
100pF
C-
100nF
Q8
MJL21194
MJL4281
D1
LED
R7
560R
R10
3k3
R12
220R
F2
3A
-35