ORDER NO. HAD 8605533C0
A2

Service Manual

SL-QD33

Turntable System

QUARTZ Direct Drive Automatic Turntable System

Color

(S)..... Silver Type
(K) .... Black Type

Note:
Only models for U.S A. and Canada are not provided with cartridge

Color	Areas
(S) (K)	[M] ..... U.S.A
(S) (K)	[MC] ... Canada
(S) (K)	[E] ..... Switzerland and Scandinavia.
(S) (K)	[EK] .... United Kingdom.
(S) (K)	[XL] .... Australia
(S) (K)	[EG] ... F R Germany.
(S) (K)	[EB] .... Belgium.
(S) (K)	[EH] .... Holland
(S) (K)	[EF] .... France.
(S) (K)	[Ei] ..... Italy.
(S) (K)	[EC] .... Czechoslovakia.
(S) (K)	[XA] .... Asia, Latin America, Middle near East, Africa and Oceania.

T4P is the standard mark for plug-in-connector system Products carrying this mark are interchangeable and compatible with each other

SPECIFICATIONS

■ TURNTABLE SECTION

Type: Quartz direct drive
Automatic turntable
Auto-start
Auto-return
Auto-stop
Repeat play
Manual play
Drive method: Direct drive
Motor: Brushless-DC motor
Drive control method: Quartz phase locked control
Turntable platter: Aluminum die-cast
Diameter 31.2 cm (12-9/32")
Turntable speeds: 33-1/3 rpm and 45 rpm
Wow and flutter: 0 012% WRMS*
0.025% WRMS (JIS C5521)
±0 035% Weighted zero to peak
(IEC 98A weighted)

* This rating refers to turntable assembly alone, excluding effects of record, cartridge or tonearm, but including platter Measured by obtaining signal from built-in frequency generator of motor assembly

Rumble: −56 dB DIN-A
(IEC 98A unweighted)
−78 dB DIN-B
(IEC 98A weighted)

■ TONEARM SECTION

Type: Static-balanced straight tonearm
Plug-in-connector cartridge system
Effective length: 230 mm (9-1/16")
Overhang: 15 mm (19/32")
Tracking error angle: Within 2°32' at outer groove of 30 cm (12") record
Within 0°32' at inner groove of 30 cm (12") record
Effective mass: 13.5 g (including cartridge)
Stylus pressure adjustment range: 1 25±0 25 g
Applicable cartridge weight: 6 g

■ CARTRIDGE SECTION
(Except for U.S.A. and Canada)

Type: Moving magnet stereo cartridge
Magnet circuit: All laminated core
Frequency response: 10 Hz~40 kHz

Technics

Matsushita Services Company
50 Meadowland Parkway,
Secaucus, New Jersey 07094

Panasonic Sales Company, Division of Matsushita Electric of Puerto Rico, Inc.
Ave 65 De Infanteria, KM 9 7
Victoria Industrial Park
Carolina, Puerto Rico 00630

Panasonic Hawaii, Inc.
91-238, Kauhi St Ewa Beach
P O Box 774
Honolulu, Hawaii 96808-0774

Matsushita Electric of Canada Limited
5770 Ambler Drive, Mississauga,
Ontario, L4W 2T3

Matsushita Electric Trading Co., Ltd.
P O Box 288, Central Osaka Japan

Output voltage:	2.5 mV at 1 kHz, 5 cm/s zero to peak lateral velocity (7 mV at 1 kHz, 10 cm/s zero to peak 45° velocity [DIN 45 500])
Channel separation:	More than 22 dB at 1 kHz
Channel balance:	Within 1 8 dB at 1 kHz
Recommended load impedance:	47 kΩ~100 kΩ
Compliance (dynamic):	12×10^{-6}cm/dyne at 100 Hz
Stylus pressure range:	1 25±0.25 g (12 5±2.5 mN)
Weight:	6 g (cartridge only)
Replacement stylus:	EPS-30ES

■ GENERAL

Power supply:	For U S.A. and Canada AC 120V, 60 Hz For United Kingdom and Australia AC 240V, 50 Hz For continental Europe AC 220V, 50 Hz For others. AC 110~127/220~240V, 50/60 Hz
Power consumption:	8 W
Dimensions (W×H×D):	430×100×375 mm (16-15/16"×3-15/16"×14-3/4") When dust cover is open 430×370×410 mm (16-15/16"×14-9/16"×16-1/8")
Weight:	4 5 kg (9 9 lb)

Specifications are subject to change without notice for further improvement.
Weight and dimensions shown are approximate

■ CONTENTS

	Page
SAFETY PRECAUTION	2
LOCATION OF CONTROLS	3
CONNECTIONS	3
DISASSEMBLY INSTRUCTIONS	4
MEASUREMENTS AND ADJUSTMENTS	6
TECHNICAL GUIDE	8
DESCRIPTION OF IC301 (SVILC6526CPA) TERMINALS	14
BLOCK DIAGRAM	15
CIRCUIT BOARD AND WIRING CONNECTION DIAGRAM	17
SCHEMATIC DIAGRAM	19
TERMINAL GUIDE OF IC'S, TRANSISTORS AND DIODES	22
REPLACEMENT PARTS LIST	23
EXPLODED VIEW	25

■ SAFETY PRECAUTION (This "safety precaution" is applied only in U.S.A.)

1. Before servicing, unplug the power cord to prevent an electric shock.
2. When replacing parts, use only manufacturer's recommended components for safety
3. Check the condition of the power cord. Replace if wear or damage is evident.
4. After servicing, be sure to restore the lead dress, insulation barriers, insulation papers, shields, etc.
5. Before returning the serviced equipment to the customer, be sure to make the following insulation resistance test to prevent the customer from being exposed to a shock hazard.

• INSULATION RESISTANCE TEST

1. Unplug the power cord and short the two prongs of the plug with a jumper wire.
2. Turn on the power switch.
3. Measure the resistance value with ohmmeter between the jumpered AC plug and each exposed metal cabinet part, such as screwheads, antenna, control shafts, handle brackets, etc Equipment with antenna terminals should read between 3MΩ and 5.2MΩ to all exposed parts. (Fig. A) Equipment without antenna terminals should read approximately infinity to all exposed parts. (Fig. B)

Note: Some exposed parts may be isolated from the chassis by design. These will read infinity.

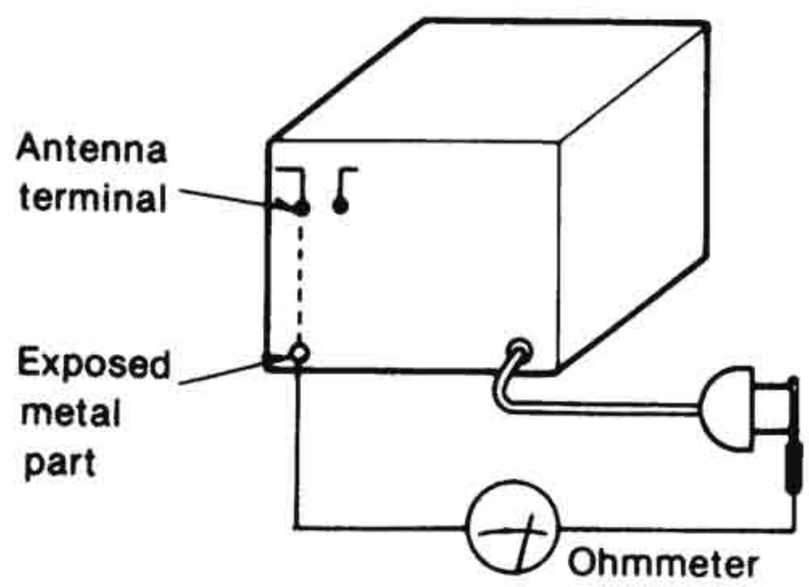

(Fig A)

Resistance = 3MΩ—5 2MΩ

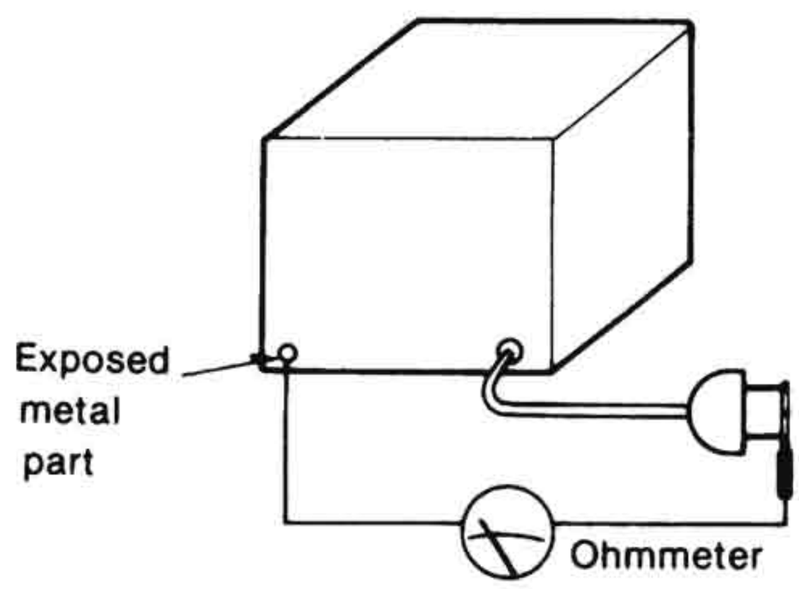

(Fig. B)

Resistance = Approx ∞

4. If the measurement is outside the specified limits, there is a possibility of a shock hazard. The equipment should be repaired and rechecked before it is returned to the customer

■ LOCATION OF CONTROLS

45-rpm adaptor
Hinges
Turntable base
Center spindle
Record size detector
Turntable mat
Turntable platter
Strobe-illuminator/
pilot lamp
Strobe lines
Tonearm
Arm rest
Arm clamp
Cartridge
(The cartridge for U S A. and Canada shown here is an option.)
Power switch
Speed selector
Repeat button
Start/stop switch
Cueing control

■ CONNECTIONS

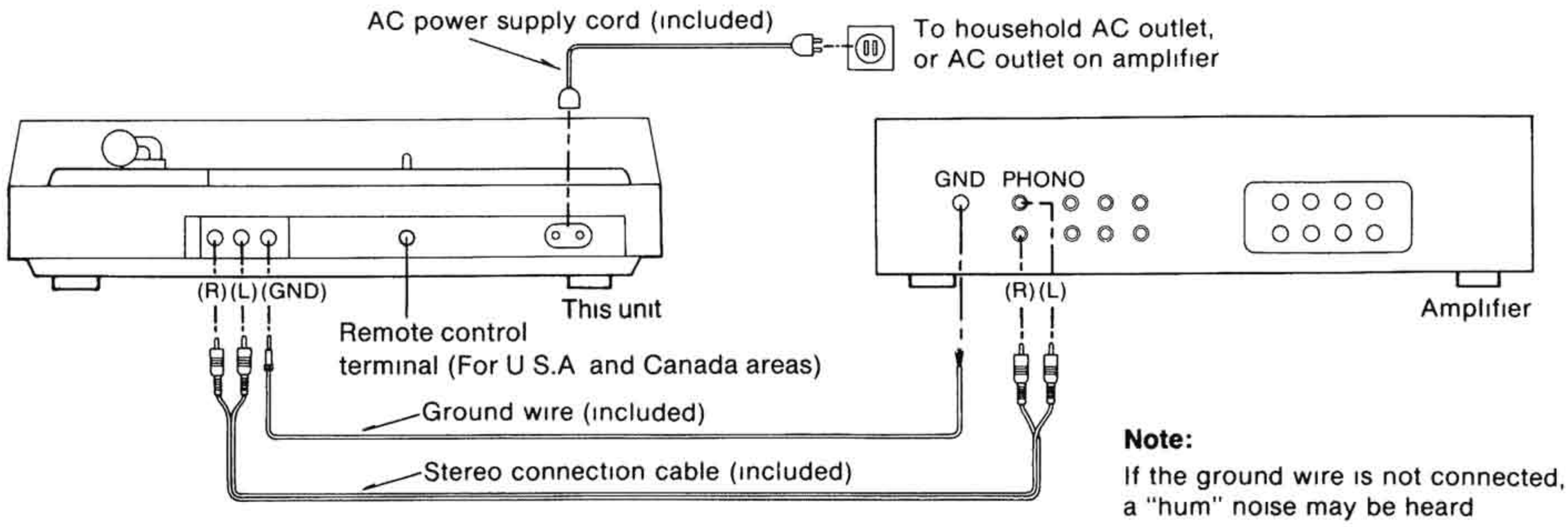

Note:
If the ground wire is not connected, a "hum" noise may be heard

■ DISASSEMBLY INSTRUCTIONS

Ref. No 1	How to remove the cartridge
Procedure 1	**Note** When servicing, remove the cartridge or stylus in order to protect the stylus tip of cartridge.

- Remove the setscrew and pull out the cartridge, taking care that your hand does not touch the stylus tip.

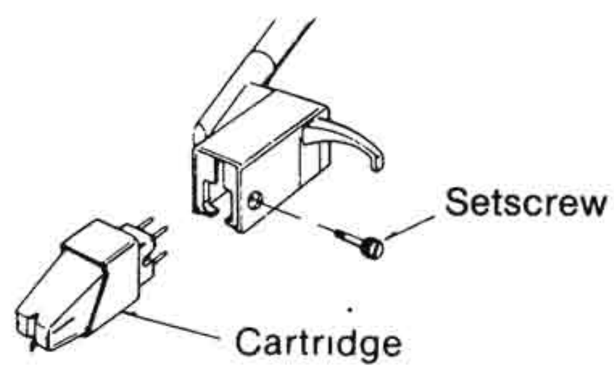

Ref. No 2	How to remove the bottom board
Procedure 2	1. Secure tonearm with arm clamp. 2. Remove the turntable platter. 3. Turn over the unit on a soft cloth. 4. Remove the 5 setscrews.

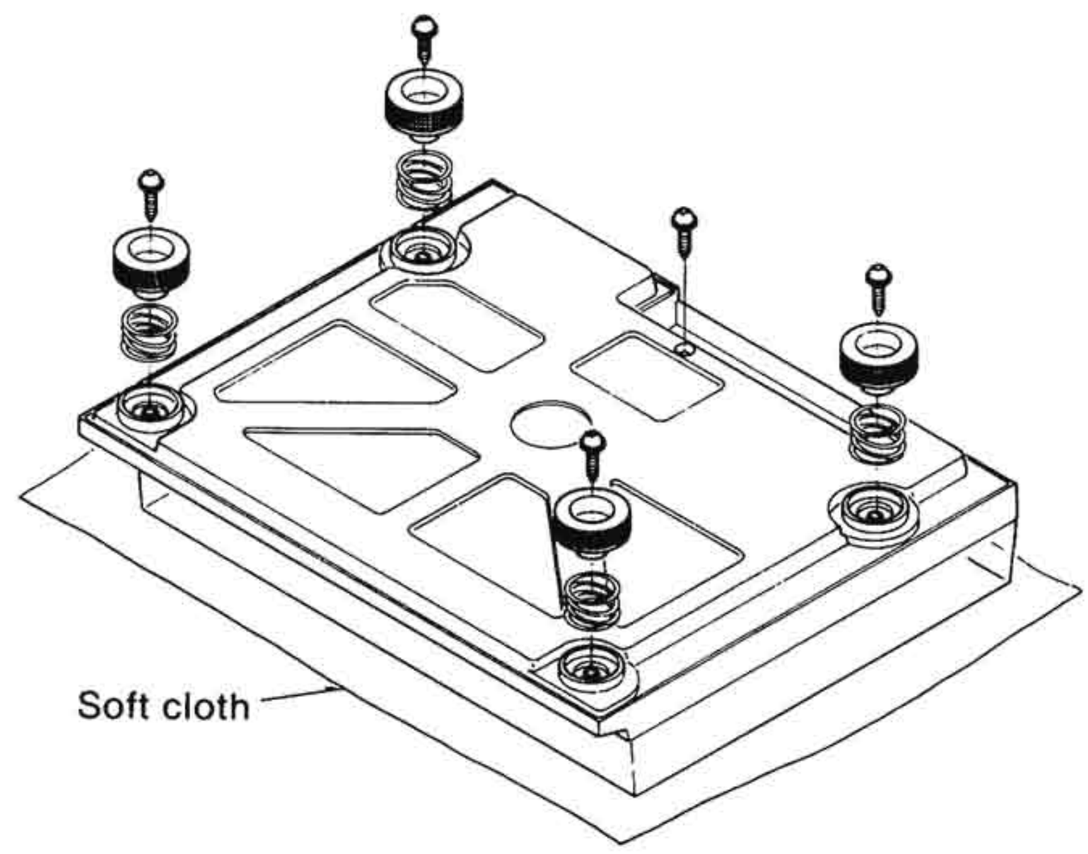

Ref. No 3	How to remove the each block
Procedure 2 ➧ 3	• Remove the setscrews of each black as shown in drawing.

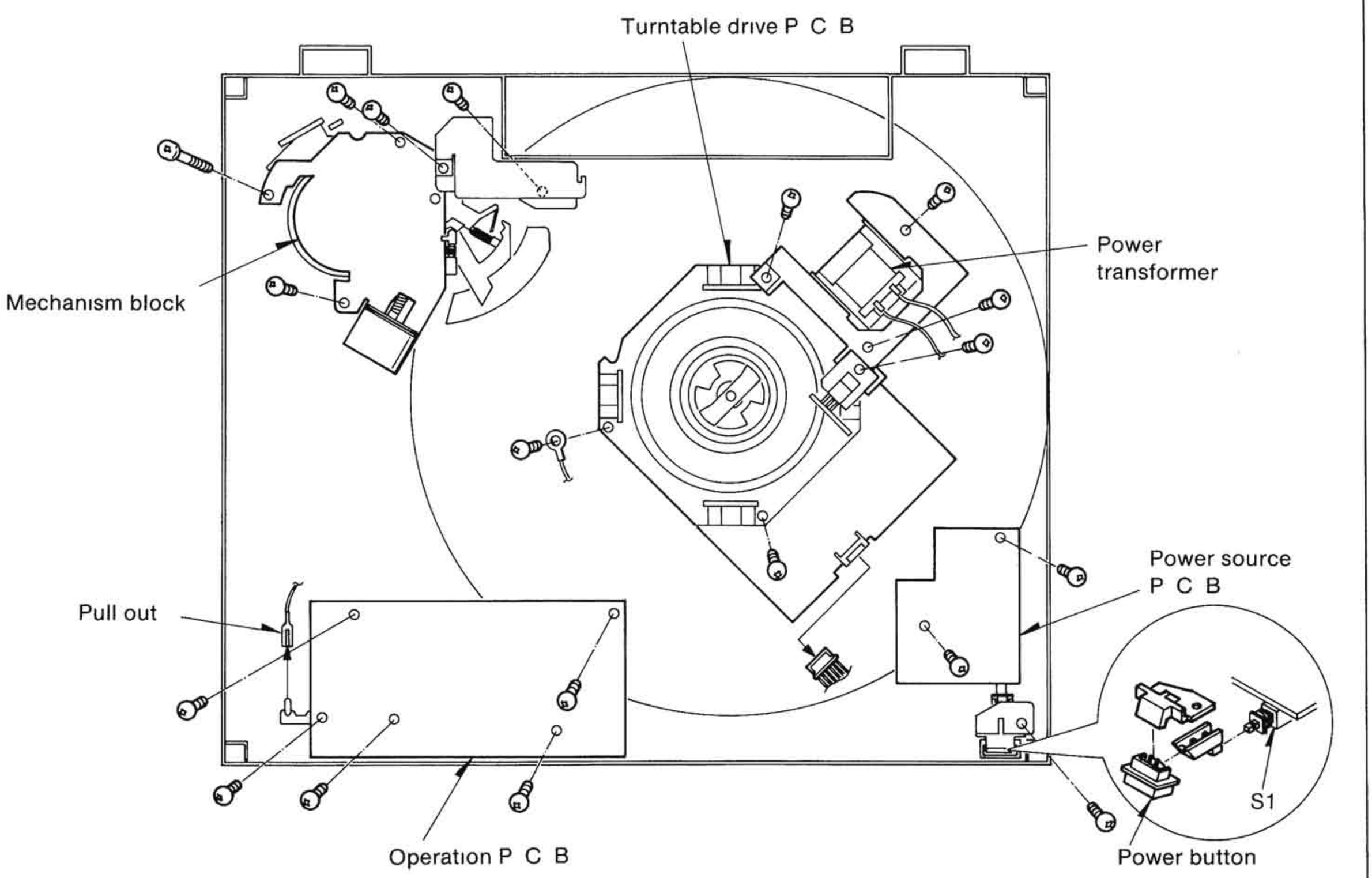

Ref. No 4	How to remove the tonearm
Procedure 3 ▸ 4	1 Remove the mechanism block. 2. Remove in the numerical order shown

1. Unsolder the 5 lead wires.

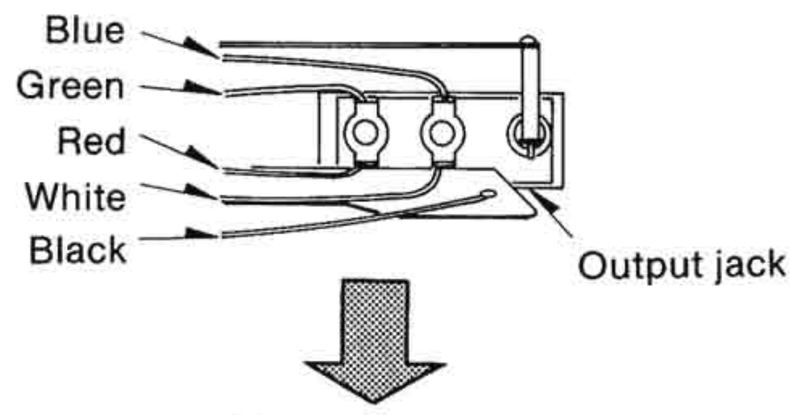

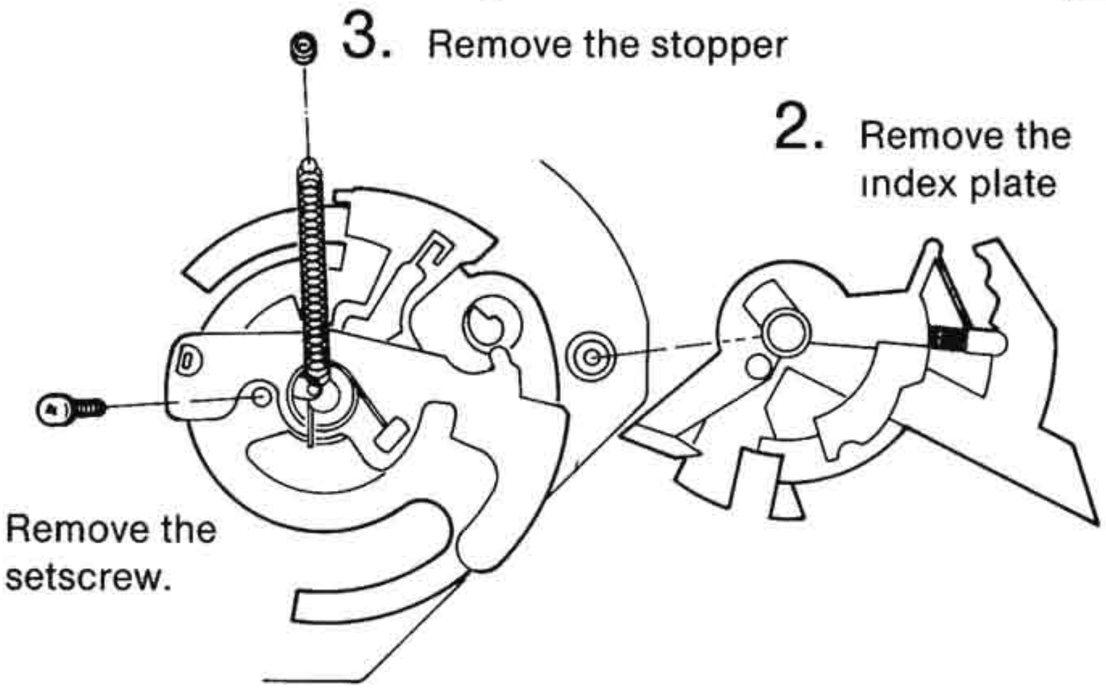

Ref. No 5	How to remove the motor
Procedure 3 ▸ 5	• Remove the 3 setscrews.

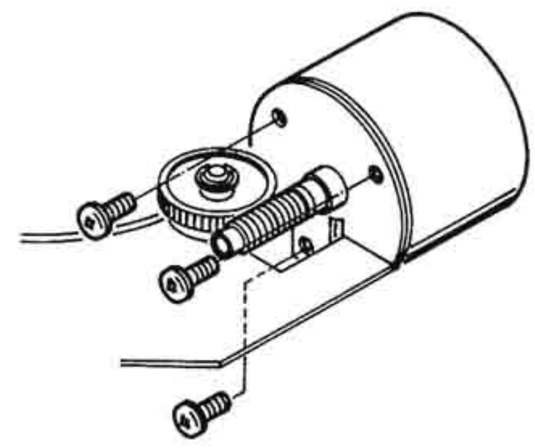

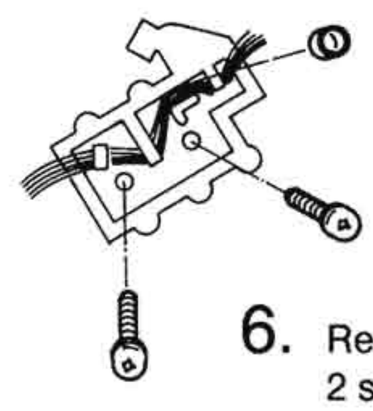

Ref. No 6	How to fit the mechanism board
Procedure 6	1. Secure tonearm with arm clamp. 2. Fit in the numerical order.

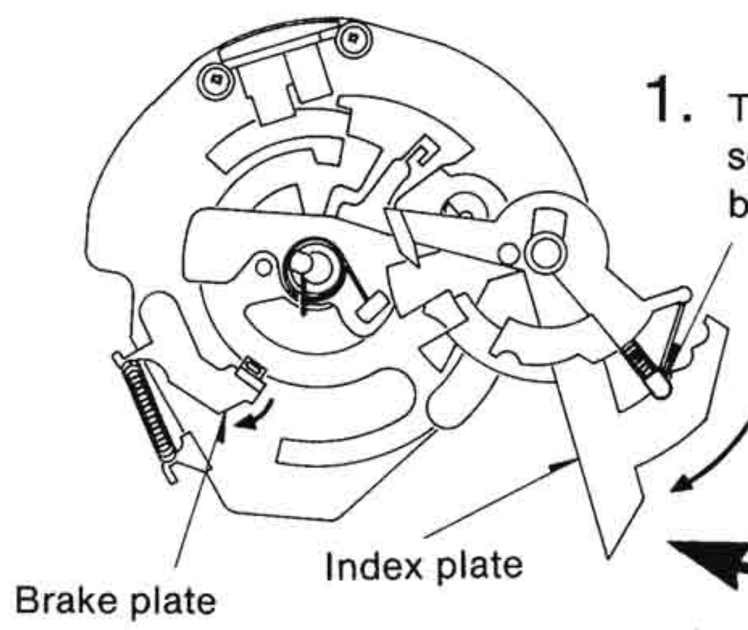

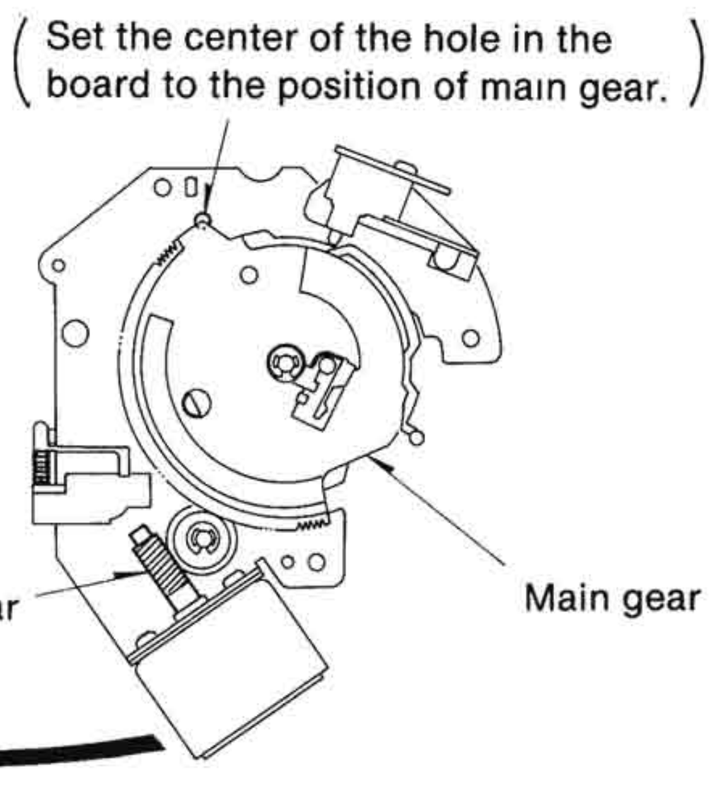

Note: In this condition, tonearm is in the state of "cueing up", but it will be shifted to "cueing down" when power switch is turned "on" after assembly.
It can be installed in the initial state, but in that case the brake plate touches the main gear Therefore, pull the brake plate when installing

- **Movable piece cutting**

When using the movable piece for this unit, cut off the part as shown by using nippers

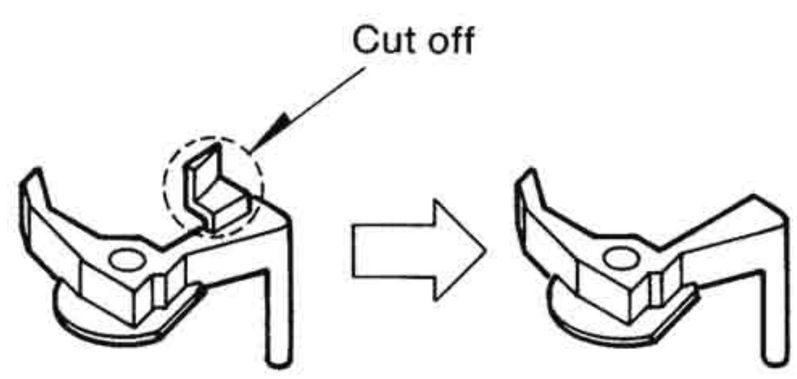

■ MEASUREMENTS AND ADJUSTMENTS

ADJUSTMENT POINTS

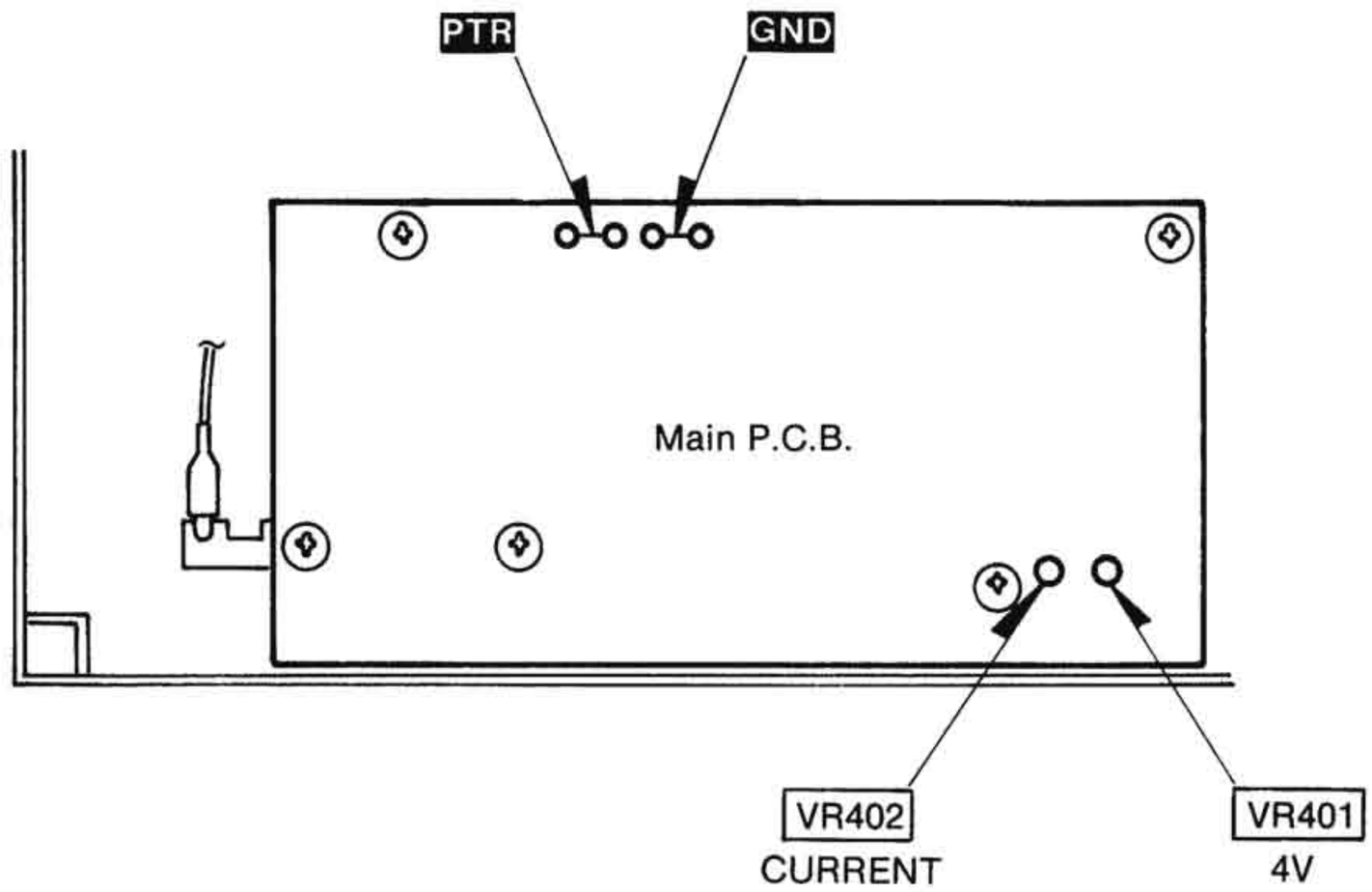

STATE OF SET

1. Remove the bottom plate and put it on the repair table.
2. Make sure that the tonearm is free (cueing down) in the rest position. (If it is not free, turn on the power switch and wait until the tonearm is free.)
3. Set the stylus cover on the cartridge, and remove the rubber cap of arm base.
4. Turn over the turntable mat and put it on the turntable platter. (The turntable mat is provided with match mark at the position R65 mm and R48 mm from the center.)

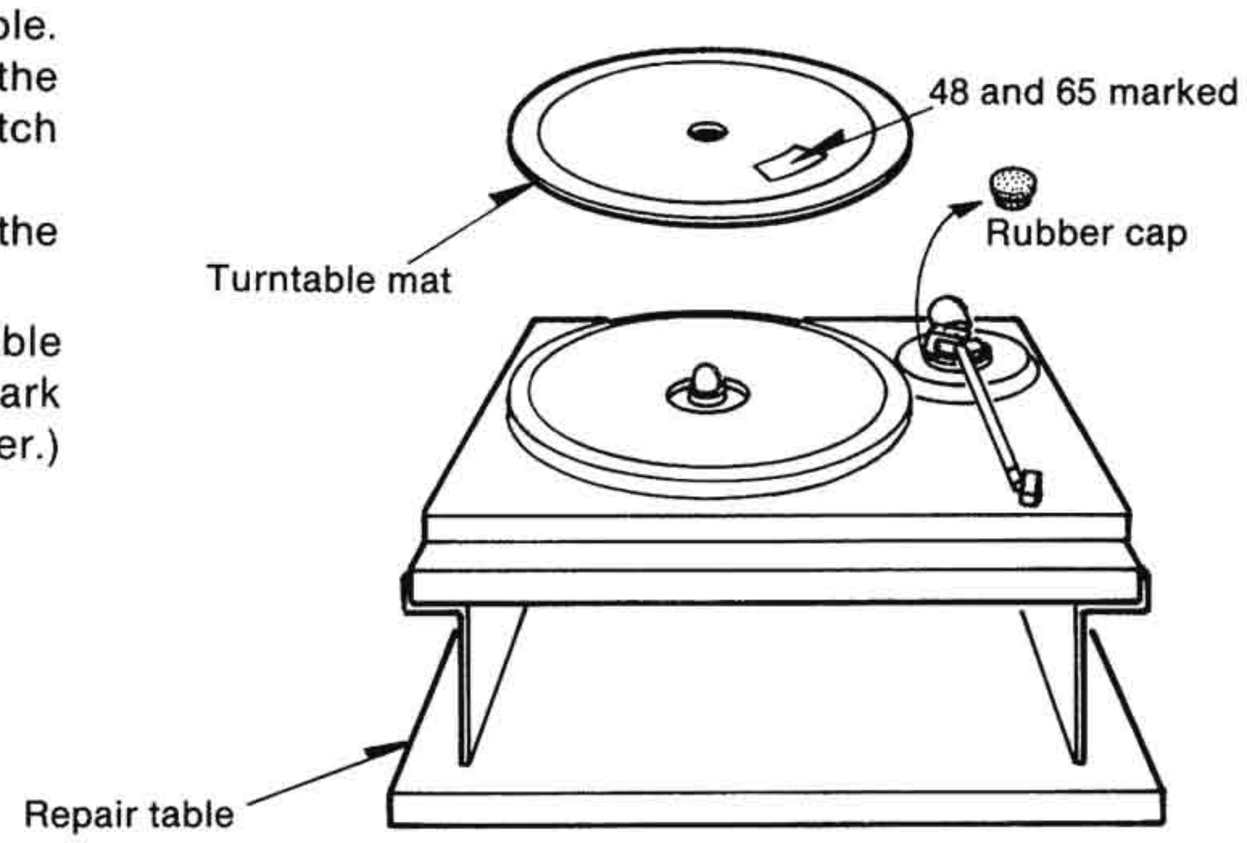

PROCEDURE BEFORE ADJUSTMENT

The microcomputer used in this unit has a function to select normal and adjustment modes. There are **Test 1** and **Test 2** for the adjustment mode. So, check the mode before making the adjustment.

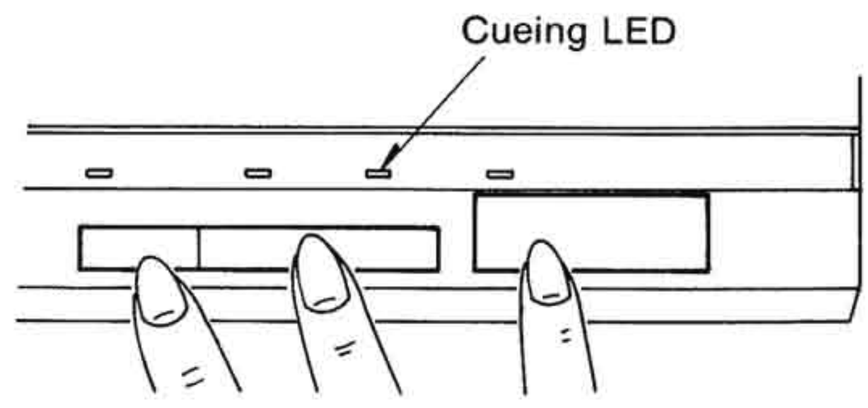

How to select the adjustment mode

1. **Test mode 1**
   Before turning **on** the power switch, make sure that the tonearm is free in the rest position, and set all the 4 operation keys to **on** (pressing all the keys with fingers). Subsequently, turn **on** the power swith. **(In the test mode, the turntable will not rotate even when the tonearm is moved inwards.)**
2. **Test mode 2**
   Press the Stop key once in the state of Test mode 1.
3. **Normal mode**
   Press the Stop key once in the state of Test mode 2

CURRENT ADJUSTMENT

1. Set the microcomputer to **Test mode 1**.
2 Connect DC voltmeter to **PTR** (+) and **GND** (−) of P.C.B.
3 Move the tonearm to the position where the reading of DC voltmeter is **8V±0.005V**.
4 Adjust **VR402** so that cueing LED lights up.
5. After the LED lights up, be sure to turn off the power switch.

(Be sure to turn off the power switch before the next adjustment.)

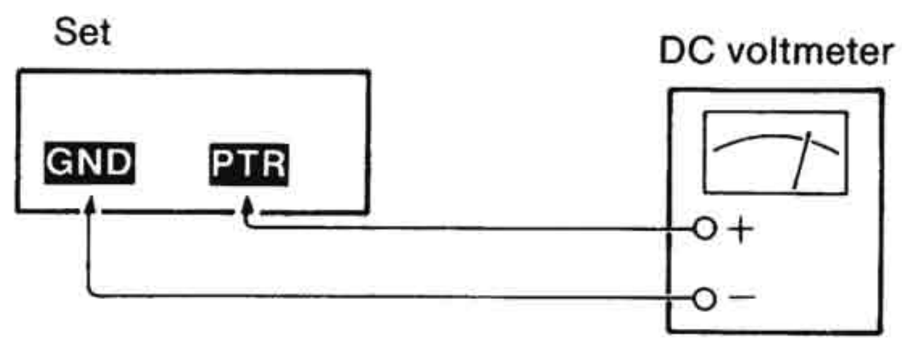

8V ADJUSTMENT

1. Set the microcomputer to **Test mode 1**.
2 Manually fix the stylus cover in the **65** position of turntable mat, matching the marks (▽).
3. Turn the **shutter plate adjusting screw** in the adjusting hole of the arm base so that the **cueing LED lights up**.

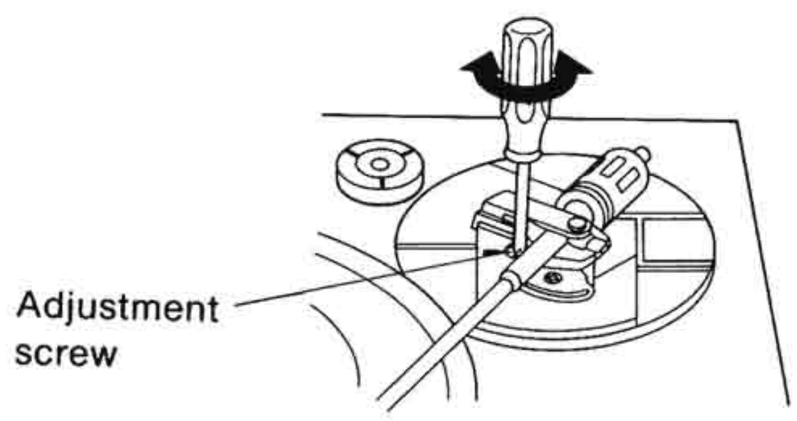

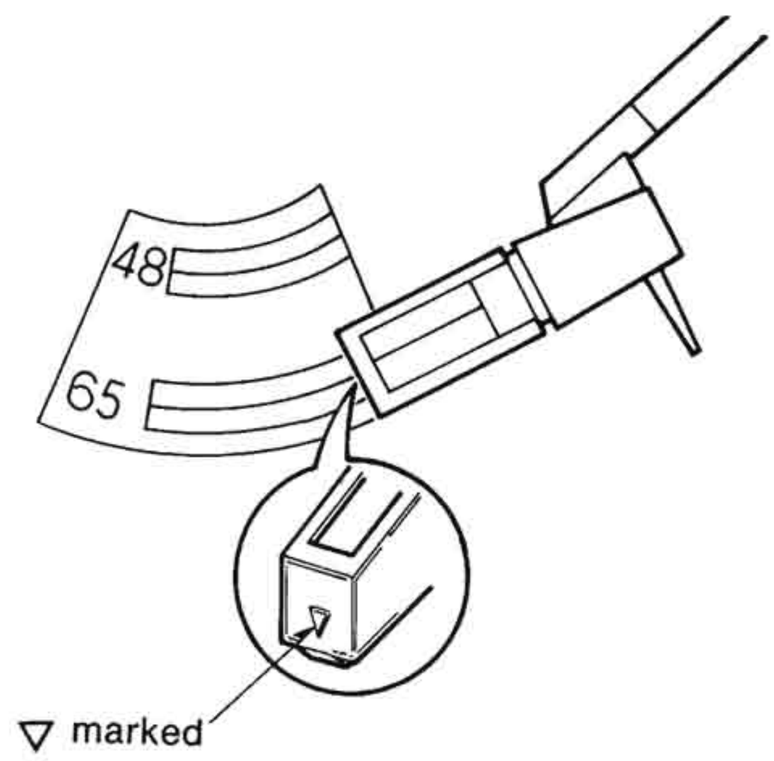

4V ADJUSTMENT

1. Press the Start/Stop key or Stop key and shift the mode to **Test 2** (In SL-QD33, Repeat LED lights up.)
2. Manually fix the stylus cover in the **48** position of turntable mat, matching the marks (▽).
3. Turn **VR401** so that the **cueing LED lights up**.
4. Return the tonearm to the rest position and press the Start/Stop or Stop key, then the mode is reset to the normal mode.

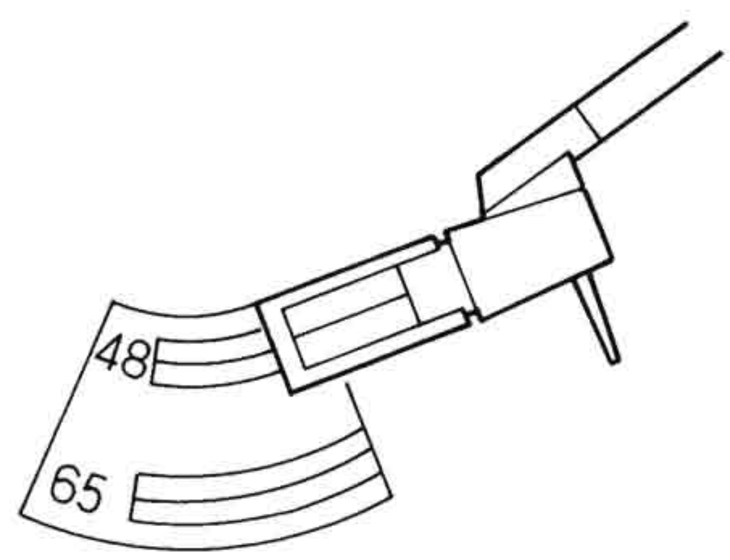

ADJUSTMENT OF THE STYLUS-TO-DISC CLEARANCE

Make this adjustment if the cartridge is replaced, or at any other time an adjustment is necessary because of the length of the stylus being used. (This adjustment is usually unnecessary.)

1. Set the cueing control to "▽".
2. Move the tonearm to a position above the disc.
3. Adjust the stylus tip position.

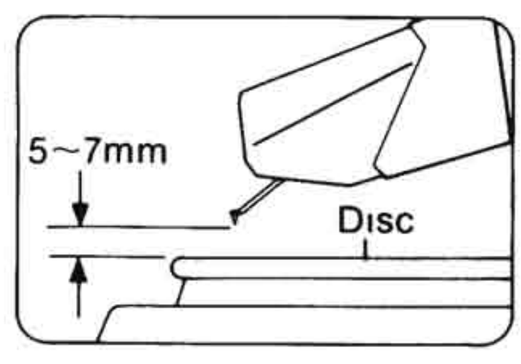

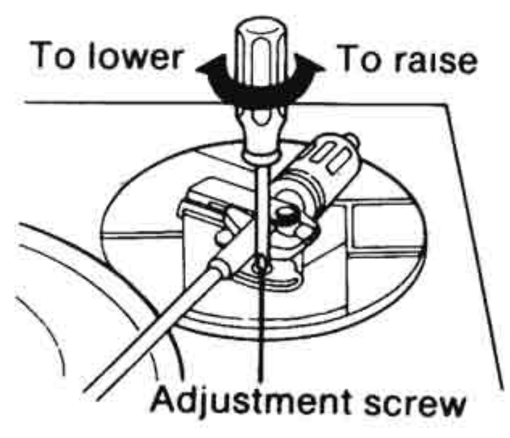

AUTOMATIC START POSITION

If the stylus does not land in the lead-in groove, adjust as follows.

1. Clamp the tonearm to the arm rest.
2. Remove the rubber cap.
3. Turn the screw with a screwdriver, clockwise or counterclockwise as necessary.

If the stylus tip sets down too far in the recorded groove,
—turn counterclockwise.
If the stylus tip sets down outside of the record,
—turn clockwise.
Adjust so the stylus tip lands 1—2 mm in from the edge of the record

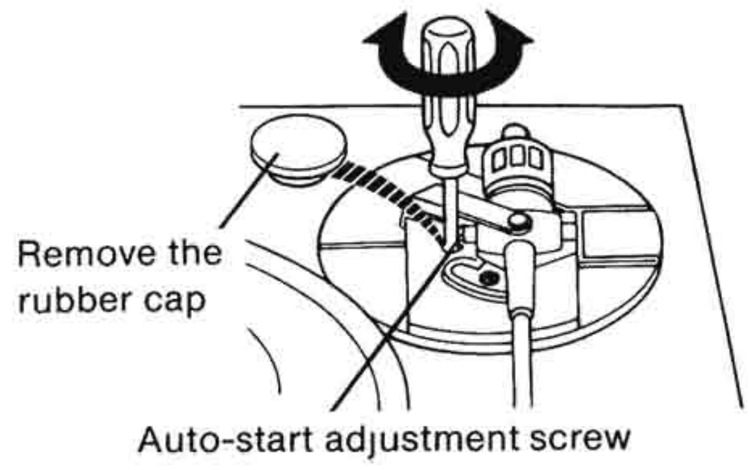

■ TECHNICAL GUIDE

Unlike the conventional mechanism, the automatic operation mechanism of this unit has been improved in performance employing a new mechanism with microcomputer and motor for automatic operation and an optical end detection system.

Description of Mechanism

1. Record size detection

The presence of record and its sizes 17 cm and 30 cm are detected by the size detection plate of the turntable platter and the index plate attached to the main body.

a) State of no record
Both of the 2 sensors are free and the detection pins are up.

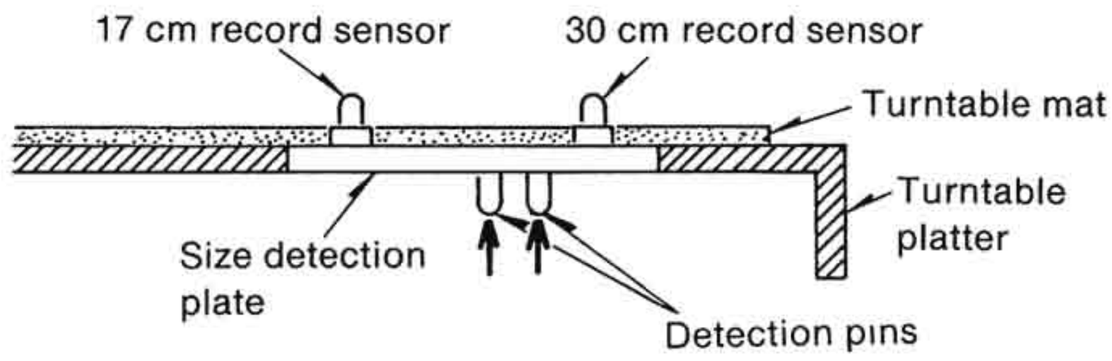

b) 17 cm record
The 17 cm record sensor is pressed by the record, and the inside detection pin is shifted down

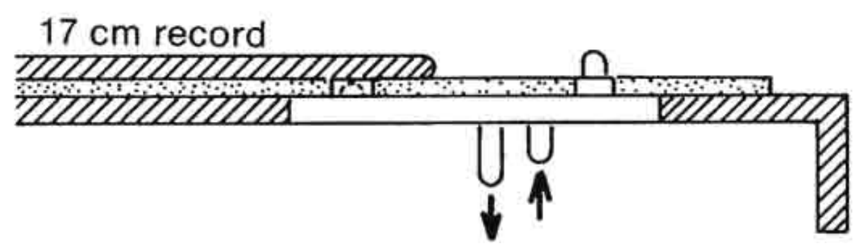

c) 30 cm record
Both of the 2 sensors are pressed, and the 2 detection pins are down.

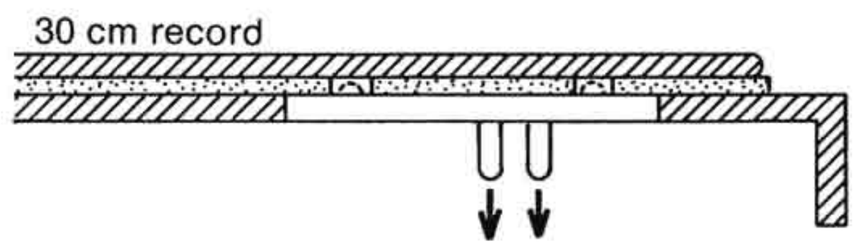

As the turntable platter starts rotating, the index plate is shifted from the initial position (broken line) to the solid line position by the arm mechanism. Since the detection pin of the turntable platter is as mentioned above, the detection pin does not touch the index plate When 17 cm record is present, the inside detection pin touches the index plate thereby setting the index plate to the position of 17 cm record When 30 cm record is present, both of the inside and outside detection pins come in touch with the index plate thereby setting the index plate to the position of 30 cm record.

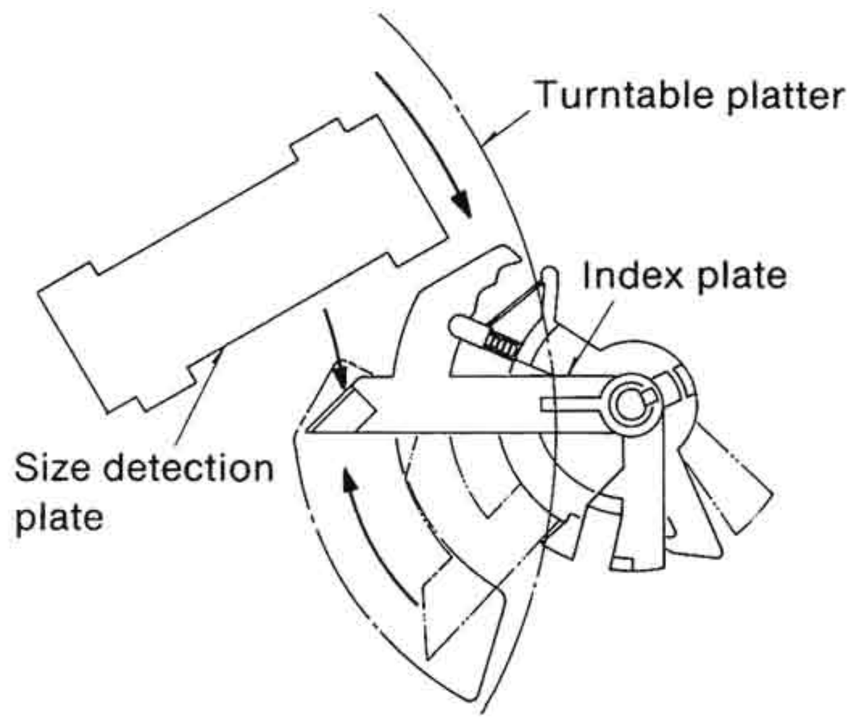

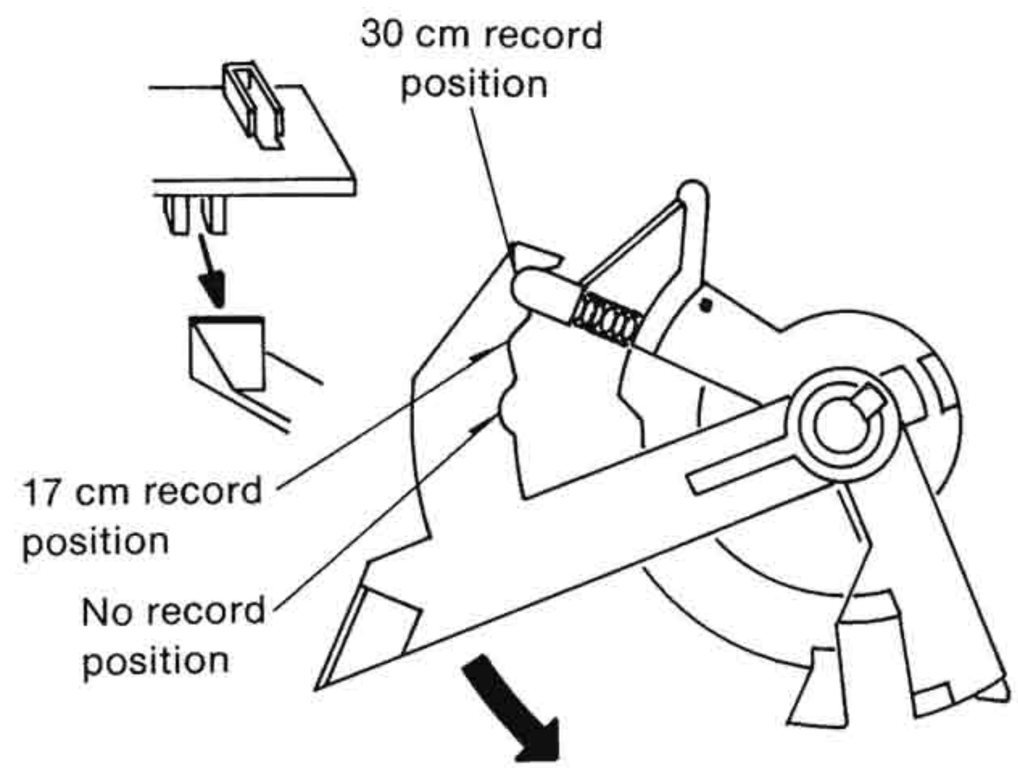

2. Drop position setting

When the index plate is set with the record size detected, the tonearm drop position at auto start is determined. The PU fixing plate moves in auto start but its movement is limited as the drop position setting pin of PU fixing plate touches the index plate to set the drop position. The position then set is the tonearm drop position.

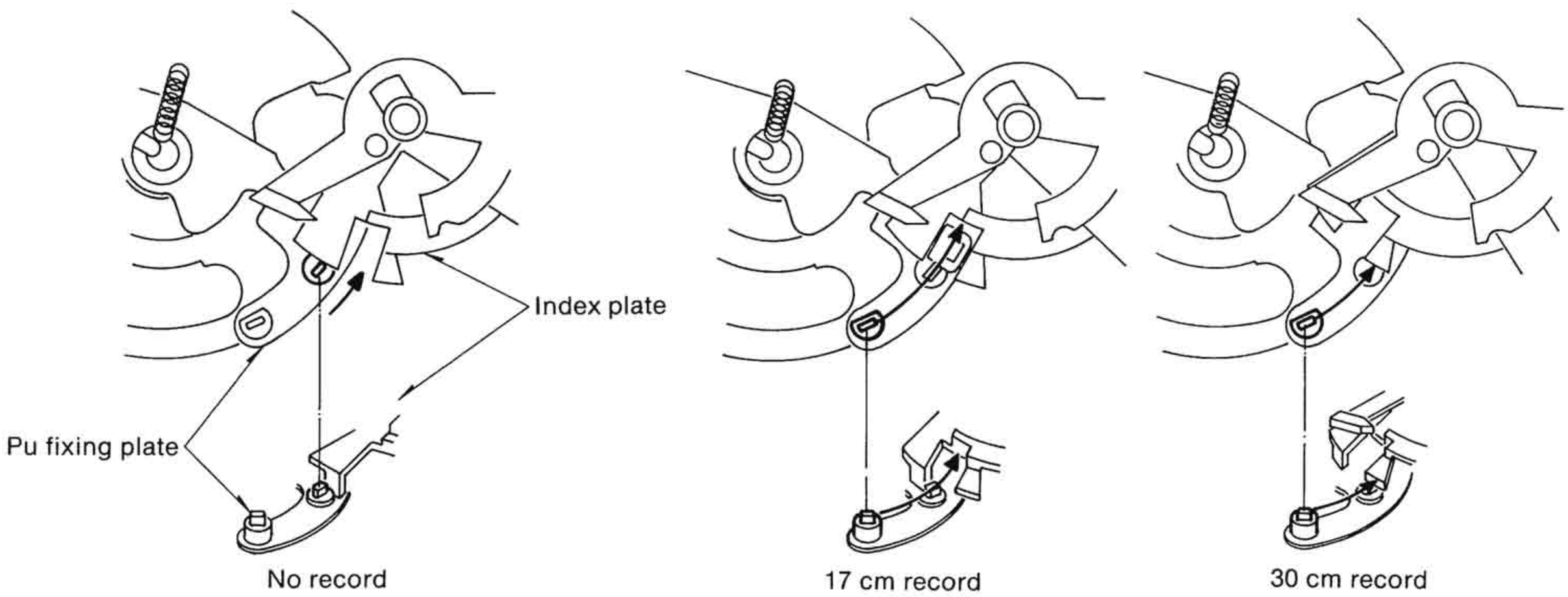

3. Mechanism of tonearm operation

The main gear is rotated by DC motor to perform cueing up/down, tonearm lead-in and return operations. Also, UP switch and DOWN switch are provided for the detection of mechanism operating position, and Rest switch, for the detection of tonearm rest position. The arm driving mechanism structure and the names of component parts are shown below.

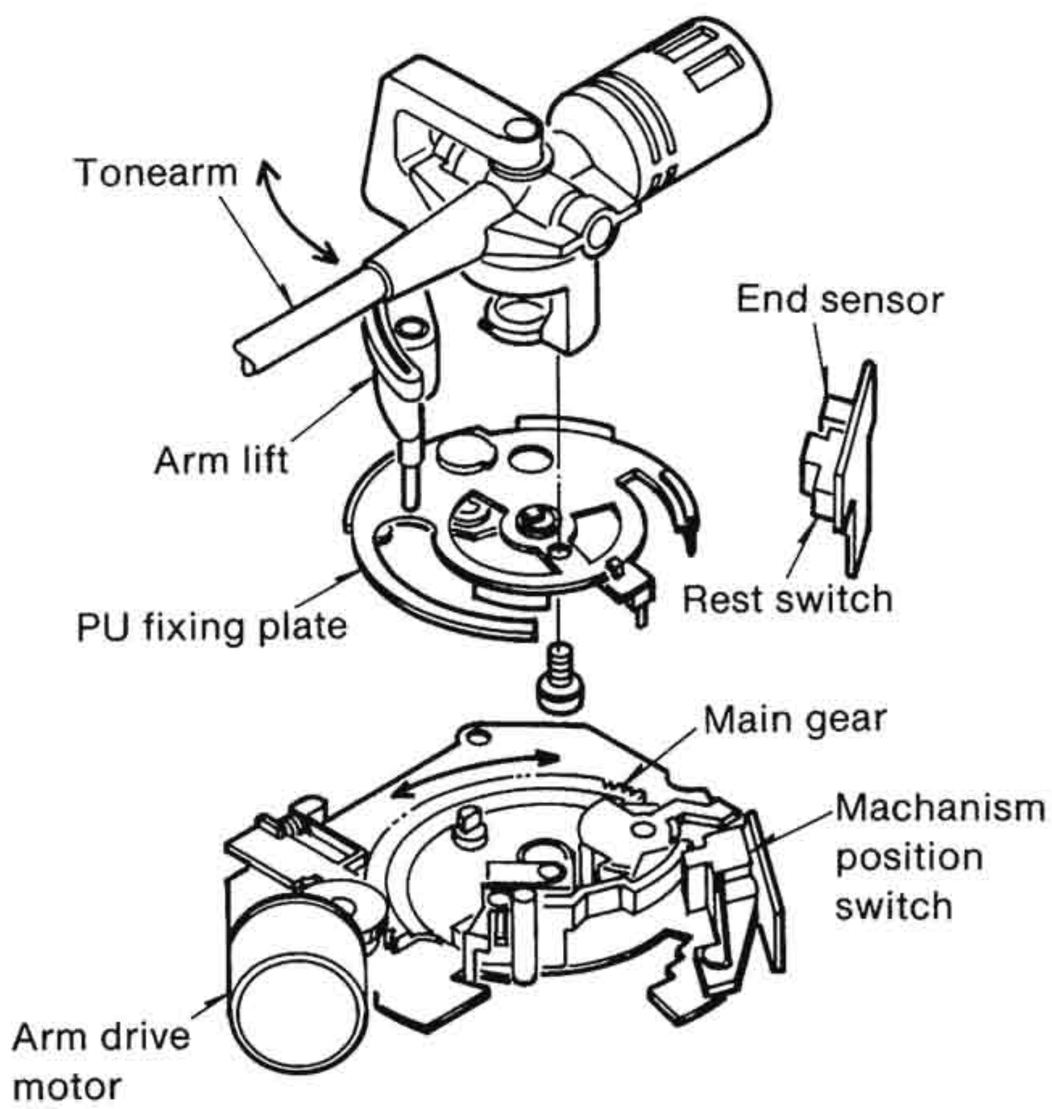

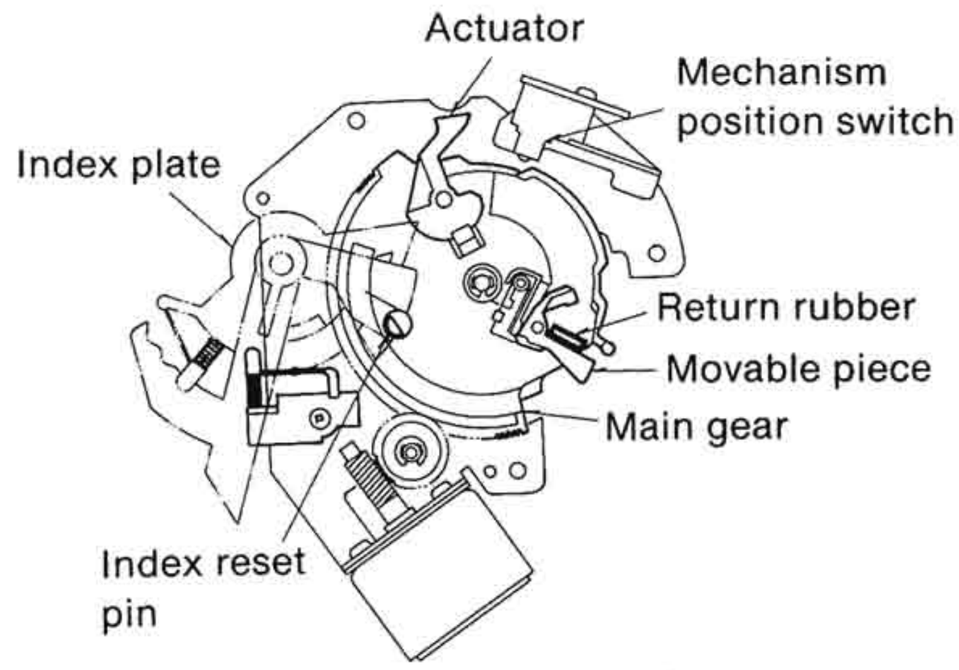

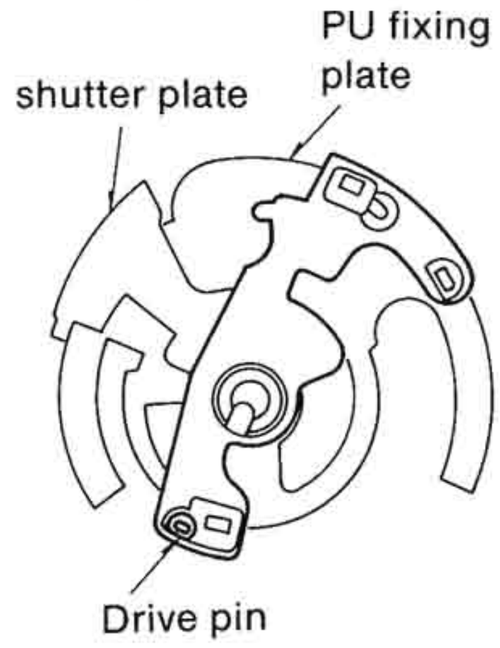

a) Cueing operation

The lift rod is initially in the position of main gear **(Fig. A)** when cueing mode is "down". With the cueing key pressed, the motor rotates according to the command from the microcomputer to turn the main gear to the position of **Fig. B**. The main gear rotation causes the cueing mode to be shifted from "down" to "up". When the cueing key is pressed again, the motor reversely rotates according to the reversing command from the microcomputer, then the main gear returns to the initial position of **Fig. A**.

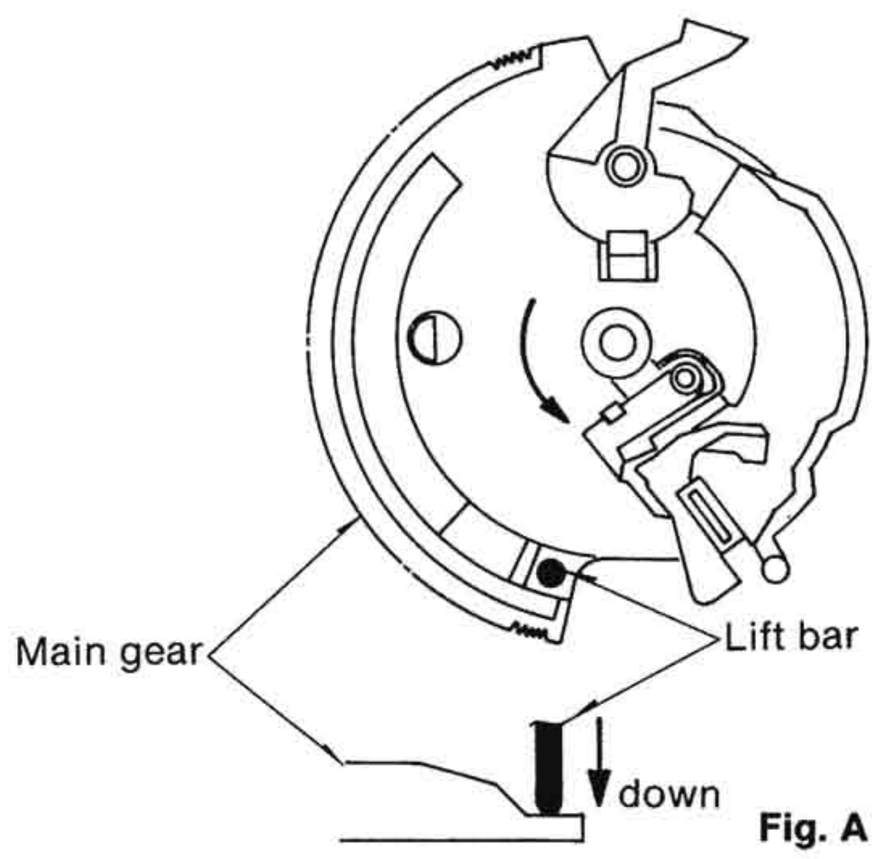

Fig. A

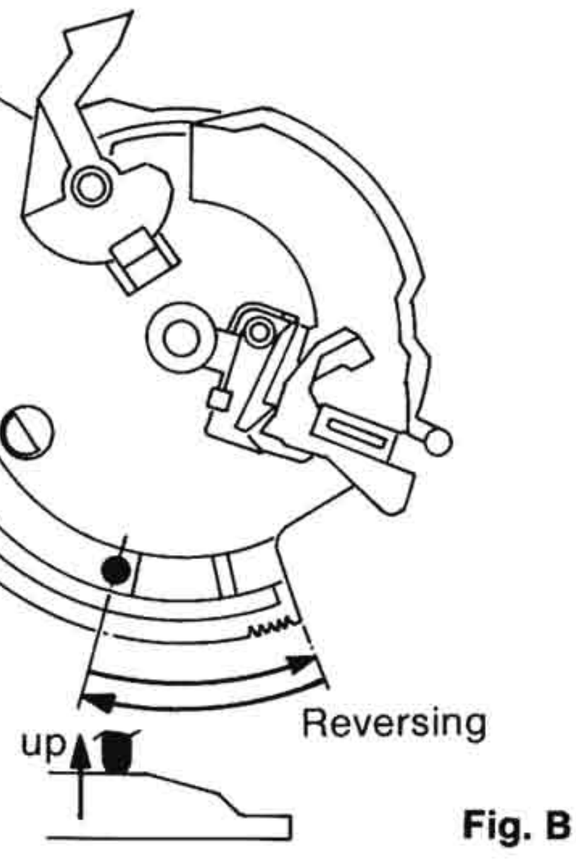

Fig. B

b) Stop operation

During play mode, the main gear is in the initial position **(Fig. A)**. With the stop key pressed, the motor rotates according to the command from the microcomputer to turn the main gear to the position of **Fig. C**. The rotation of main gear causes the cueing mode to be shifted to "up", and subsequently the return rubber pushes the drive pin of PU fixing plate to move the tonearm to the rest position. When the above operations have been completed, the motor reversely rotates according to the reversing command from the microcomputer, and the main gear returns to the initial position of **Fig. A**.

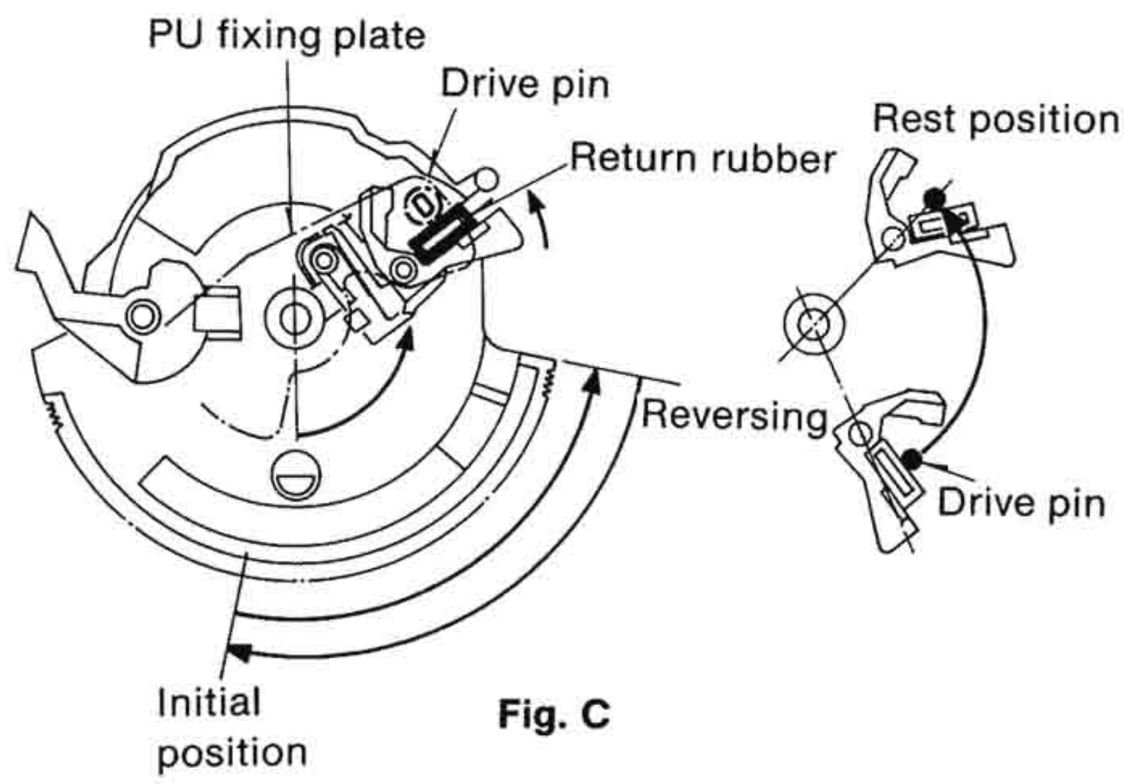

Fig. C

c) Auto start operation

When the start key is pressed, the motor rotates according to the command from the microcomputer to turn the main gear to the position of **Fig. D**. The rotation of main gear causes the cueing mode to be shifted to "up", then the mechanism is set so that the pin of movable piece touches the mechanism board to catch the drive pin of PU fixing plate located in the rest position. Also, it is set so that the record size can be detected by the index plate with the actuator of main gear. With the above operations completed, the motor reversely rotates according to the reversing command from the microcomputer to return the main gear to the initial position of **Fig. A**. In that case, the PU fixing plate moves along with main gear because the drive pin is set on the movable piece, while tonearm is moved inside, but with the record size detected, the drive pin is released from the movable piece at the record drop position since the index plate is set in place.

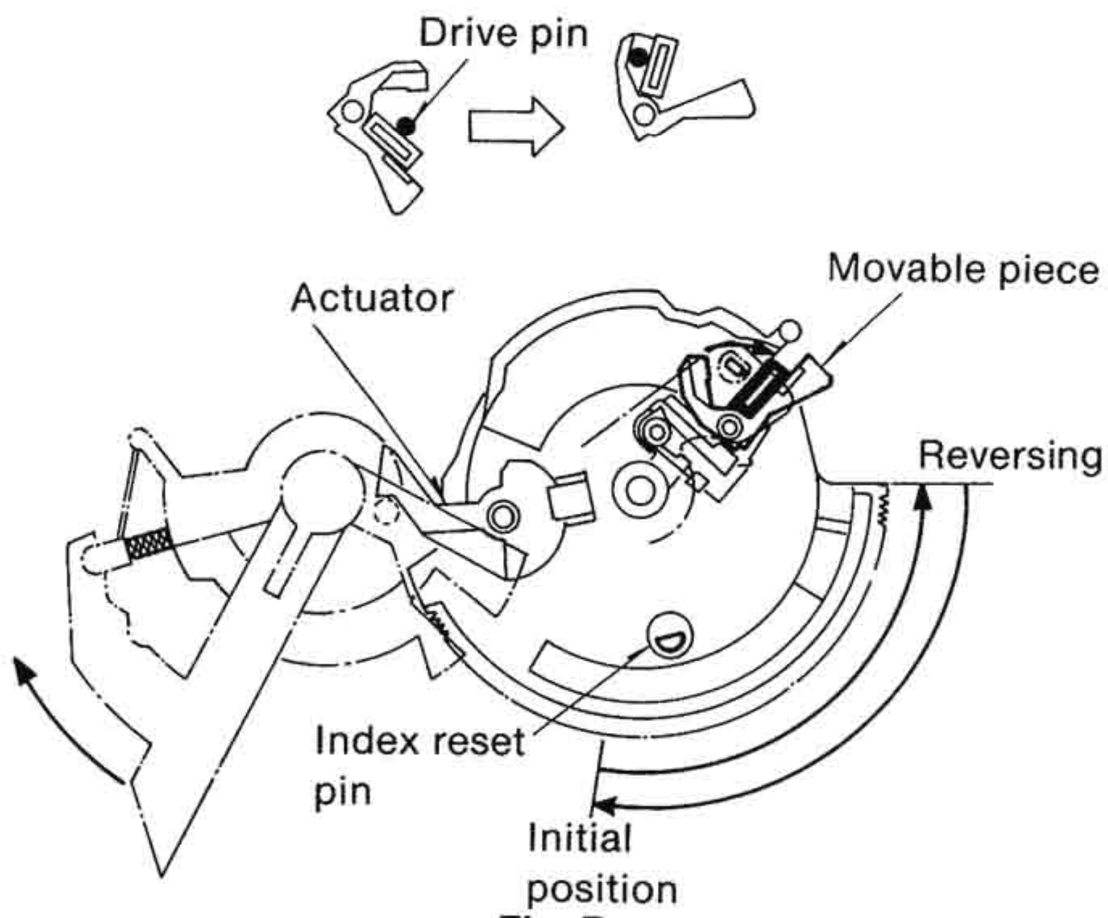

Fig. D

4. Auto mechanism timing chart

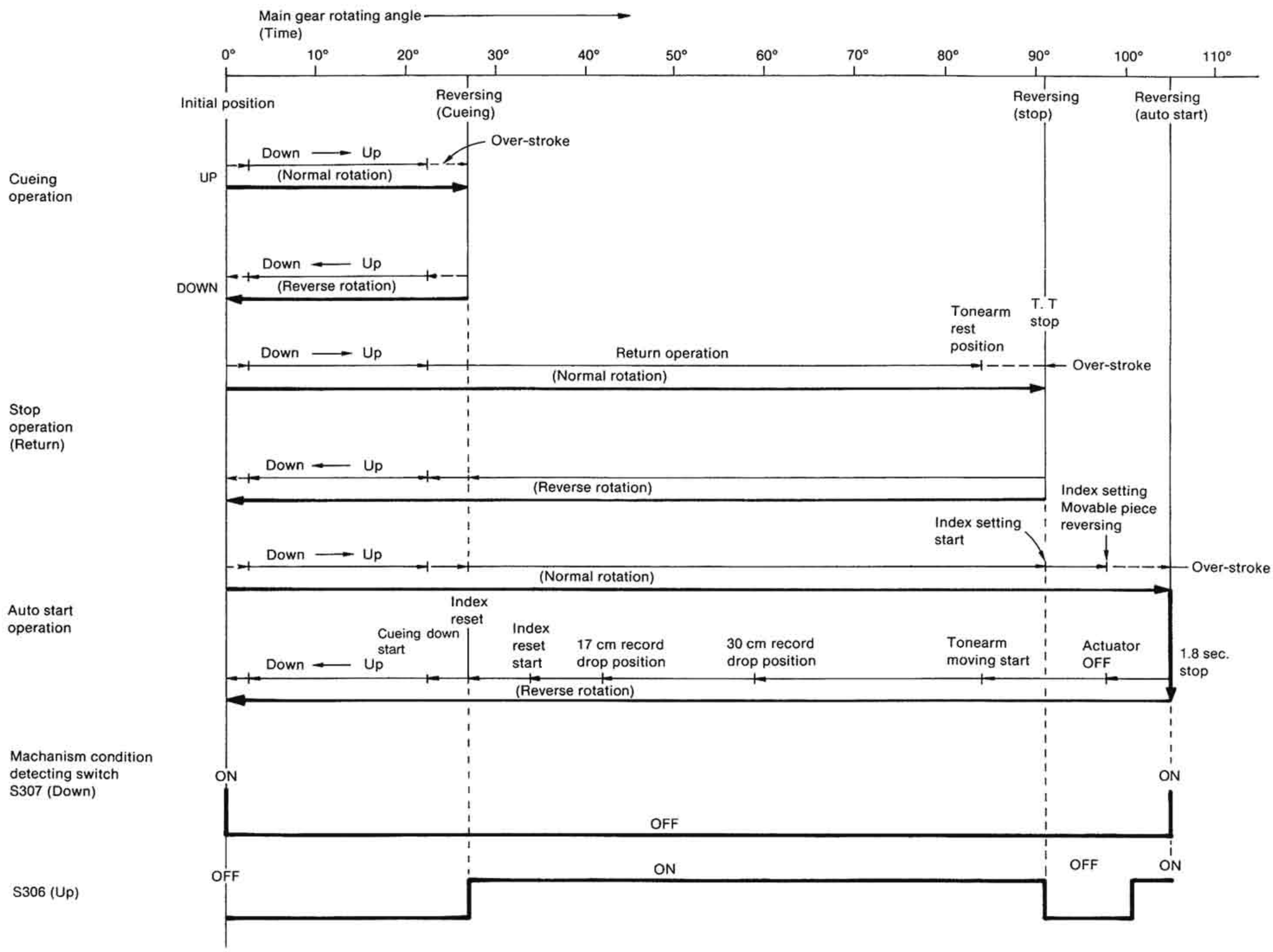

To detect the state of mechanism operation, a detection switch which turns ON/OFF with the rotation of main gear is installed as shown. With this switch operated, the state of mechanism is input to the microcomputer to give the normal or reverse rotation command to the motor.

Description of Circuit

1. End detection sensor

It detects the output voltage change when the shutter plate installed under the tonearm passes through the end detection sensor. The shutter plate is not shaped in circular arc but in volution so that the output voltage changes linearly. The good linearity part of the characteristic is used as the range of end detection. (The actual range of detection is R65~R48 mm from the center of the record.)

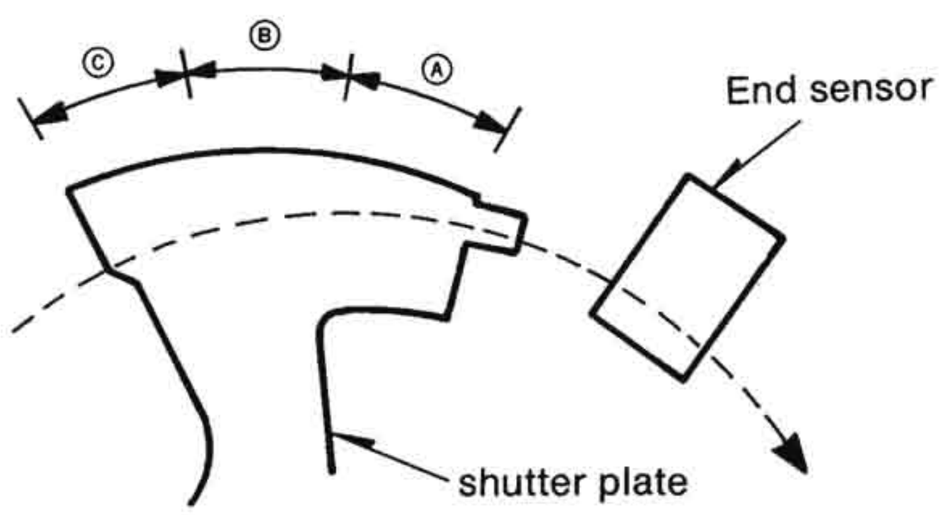

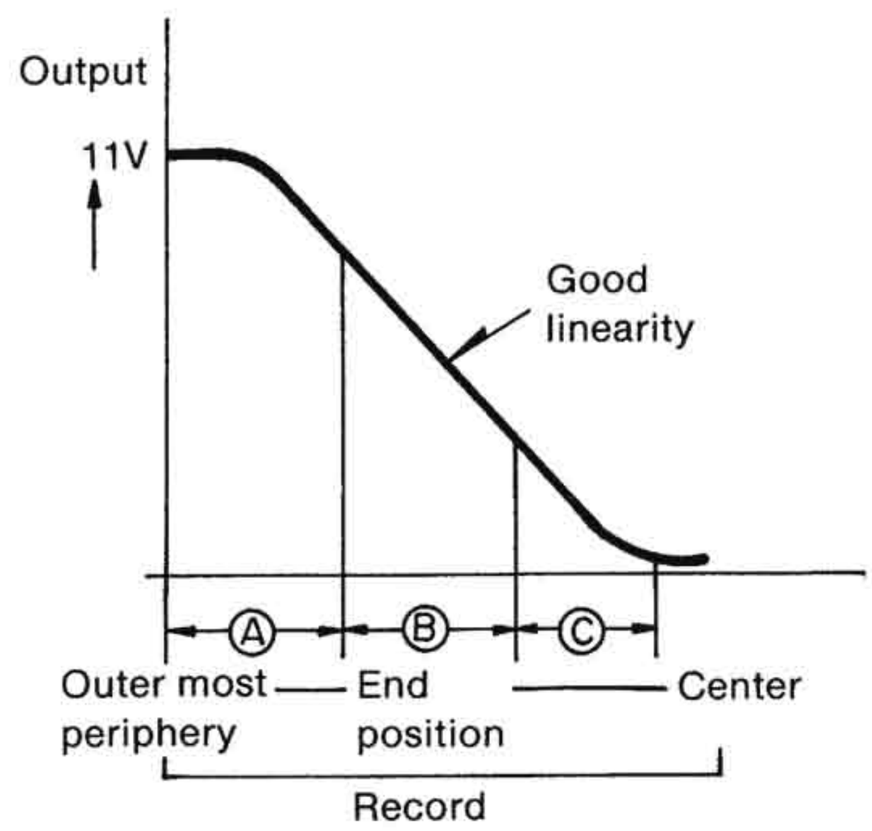

2. End detection circuit

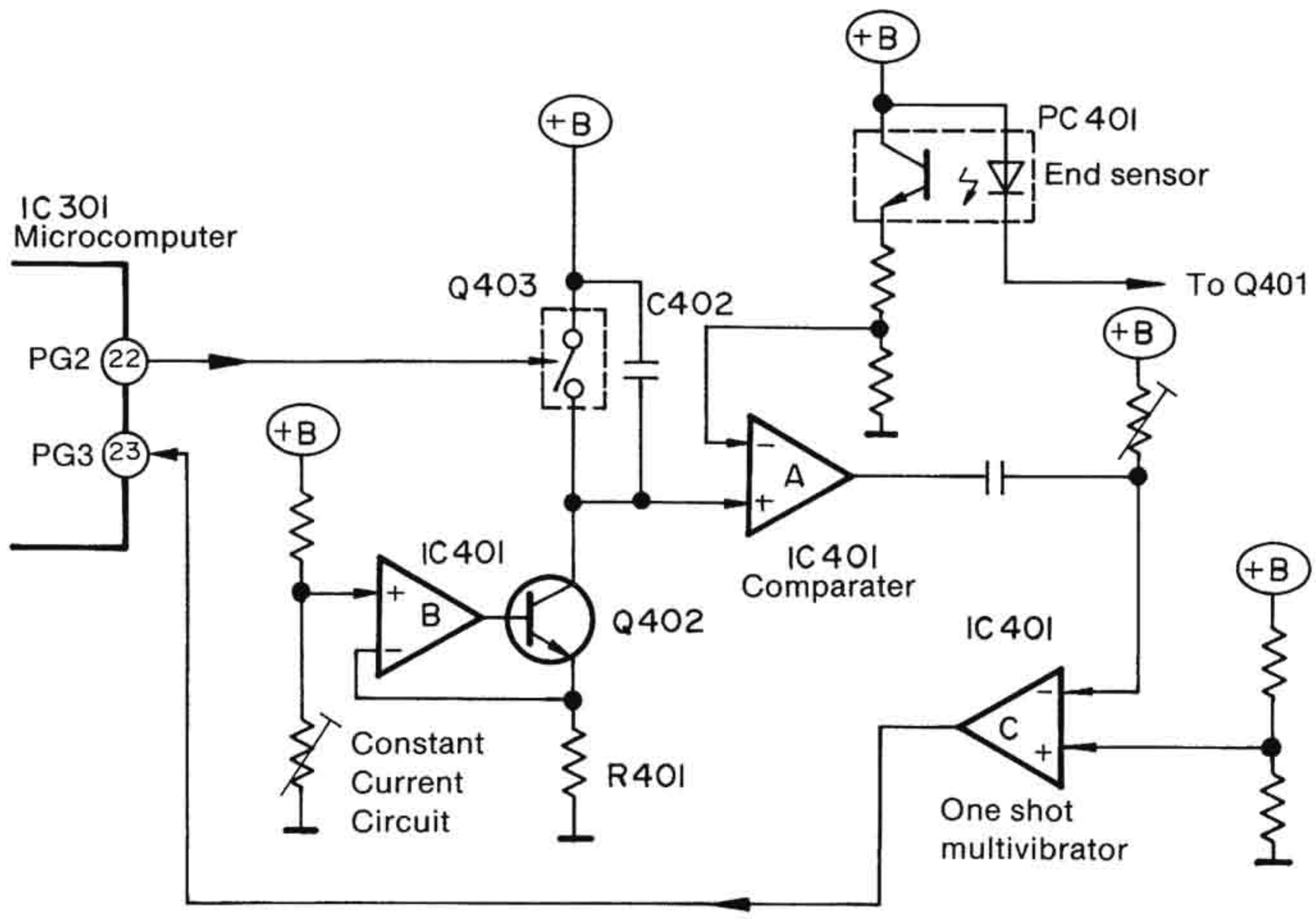

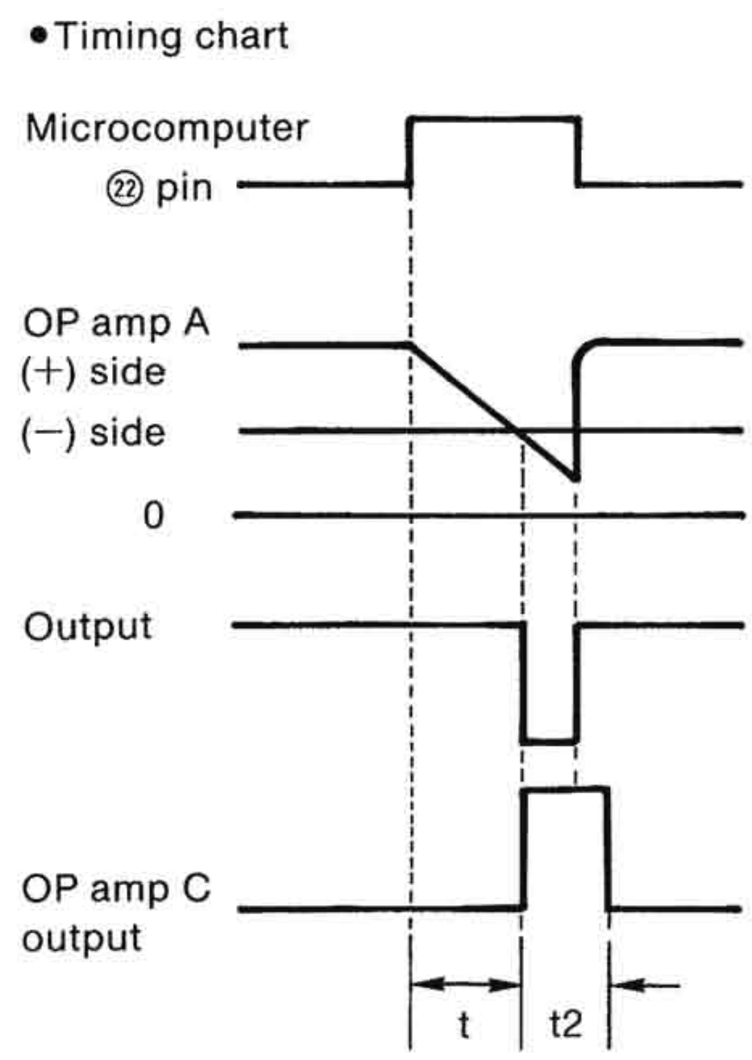

Q403 repeats to turn on/off with the strobe output from pin ㉒ (PG2) of microcomputer (IC301). When the strobe of pin ㉒ is at "L", Q403 turns on, therefore (+B) is applied to the (+) side of OP amp A (IC401). When the strobe of pin ㉒ changes to "H", Q403 turns off and the voltage on the (+) side of OP amp A is lowered but the constant current circuit consisting of OP amp B and Q402 keeps the current flowing to R401 constant so that the voltage charged in C402 is discharged causing the (+) side voltage of OP amp A to gradually decrease. The voltage and the output of end detection sensor (PC401) are compared at OP amp A. The output of OP amp A goes "L" when the (+) side voltage is lower than the (−) side voltage. The output of OP amp A is input to the (−) side of one-shot multi-vibrator consisting of OP amp C. The output of OP amp C goes "H" at the rise of (−) side input. Using this circuit, the microcomputer reads the time (t) required until rise of the pulse input to pin ㉓ with the rise of the strobe of pin ㉒. Duty (t2) of output pulse of OP amp C is read by the microcomputer during the initial detection, which is the detection sensitivity. The wider the duty, the higher the sensitivity, and vice versa. The detection sensor is set so that the output changes in the range of end detection. Therefore, t is shorter when the output voltage is higher, and it is longer when the voltage is lower. Thus, the microcomputer is able to detect the tonearm position. Also, the amount of change in t can be found by reading the amount of t several times with the rotation of turntable platter, and therefore the tonearm advancing speed can be judged from the amount of change in t. In this way, the microcomputer detects the end of record to control the arm drive mechanism.

3. Automatic adjustment of end detection sensor output

In order to stabilize the operation point of end detection sensor after power ON, the output is automatically adjusted by the microcomputer so that the detection sensor output voltage becomes 11V while the tonearm is in the rest position and is returned to the rest position.

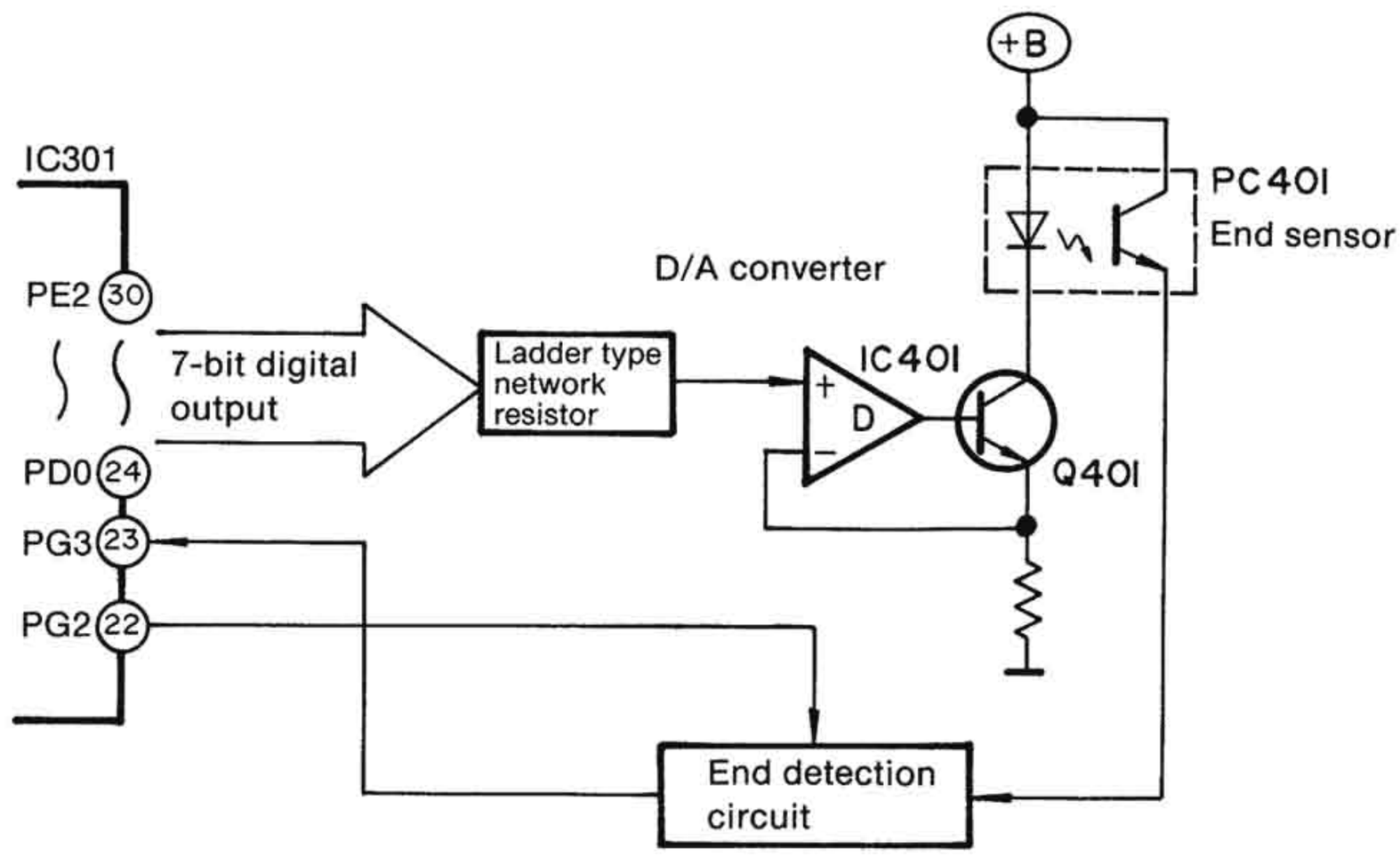

When the tonearm is in the rest position, 7-bit pulses are output from pins ㉔~㉚ of microcomputer, and the digital output is changed to analog output by OP amp D and D/A converter consisting of ladder type network resistor, thereby controlling the current flowing to LED of the detection sensor. In that case, strobe is output from pin ㉒ (PG2) of microcomputer, and the sensor output is detected by the end detection circuit mentioned in the previous section. The microcomputer outputs 7-bit pulses until the detected output becomes 11V thereby automatically adjusting the output of detection sensor.

■ DESCRIPTION OF IC301 (SVILC6526CPA) TERMINALS

Pin No.	Mark	Description
1	PE3	Turntable start/stop command output terminal ("L" at start, "H" at stop.)
2	VDD	Power supply terminal (+5V)
3	PF0	Mechanism condition detecting switch (Down SW) input terminal. (Mechanism condition is detected in up switch combination.)
4	PF1	Mechanism condition detecting switch (Up SW) input terminal. (Mechanism condition is detected in down switch combination.)
5	PF2	Full-auto mechanism and semi-auto mechanism mode changeover terminal. [Open...full-auto (SL-QD33), Ground...semi-auto (SL-QD22).]
6	PF3	Tonearm rest position detecting switch input terminal. ("L" with tonearm is rest position.)
7	PG0	45 LED lighting output and speed changeover command output terminal (LED lights up at "L", 45 r.p.m....."L", 33 r.p.m....."H".)
8	PG1	REPEAT LED lighting output terminal. (LED lights up at "L".)...full-auto (SL-QD33)
9	PG2	CUEING LED lighting output terminal. (LED lights up at "L".)
10	PG3	START/STOP LED lighting output terminal. (LED lights up at "L".)
11	PA0	Speed select key input terminal. (Used in full-auto mode.) 33 key input terminal. (Used in semi-auto mode.)
12	PA1	Repeat key input terminal. (Used in full-auto mode.) 45 key input terminal. (Used in semi-auto mode.)
13	PA2	Cueing key input terminal.
14	PA3	Start/stop key input terminal. (Used in full-auto mode.) Stop key input terminal. (Used in semi-auto mode.)

Pin No.	Mark	Description
15	OSC2	Clock oscillation input terminal. (800 kHz)
16	OSC1	Clock oscillation input terminal. (800 kHz)
17	TEST	Test terminal (Not used, connected to ground.)
18	VSS	Ground terminal
19	REST	Reset terminal (Microcomputer is reset at "L".)
20	PG0	Tonearm motor drive control output terminal.
21	PG1	

Part	Motor conditions			
	Braked	Free	Normal	Reverse
PG0	H	L	L	H
PG1	H	L	H	L

Pin No.	Mark	Description
22	PG2	Strobe output terminal. (Strobe is output during detection sensor automatic output adjustment and end detection.)
23	PG3	Detection sensor automatic output adjustment and end detection input terminal. (It reads the time from rise of strobe of PG2 until rise of pulse input during automatic adjustment and end detection.)
24	PD0	LSB
25	PD1	7-bit digital output terminal.
26	PD2	
27	PD3	(7-bit pulses are output to LED of detection sensor until the output of detection sensor becomes 11V with the input of PG3.....Automatic output adjustment of detection sensor.)
28	PE0	
29	PE1	
30	PE2	MSB

■ BLOCK DIAGRAM

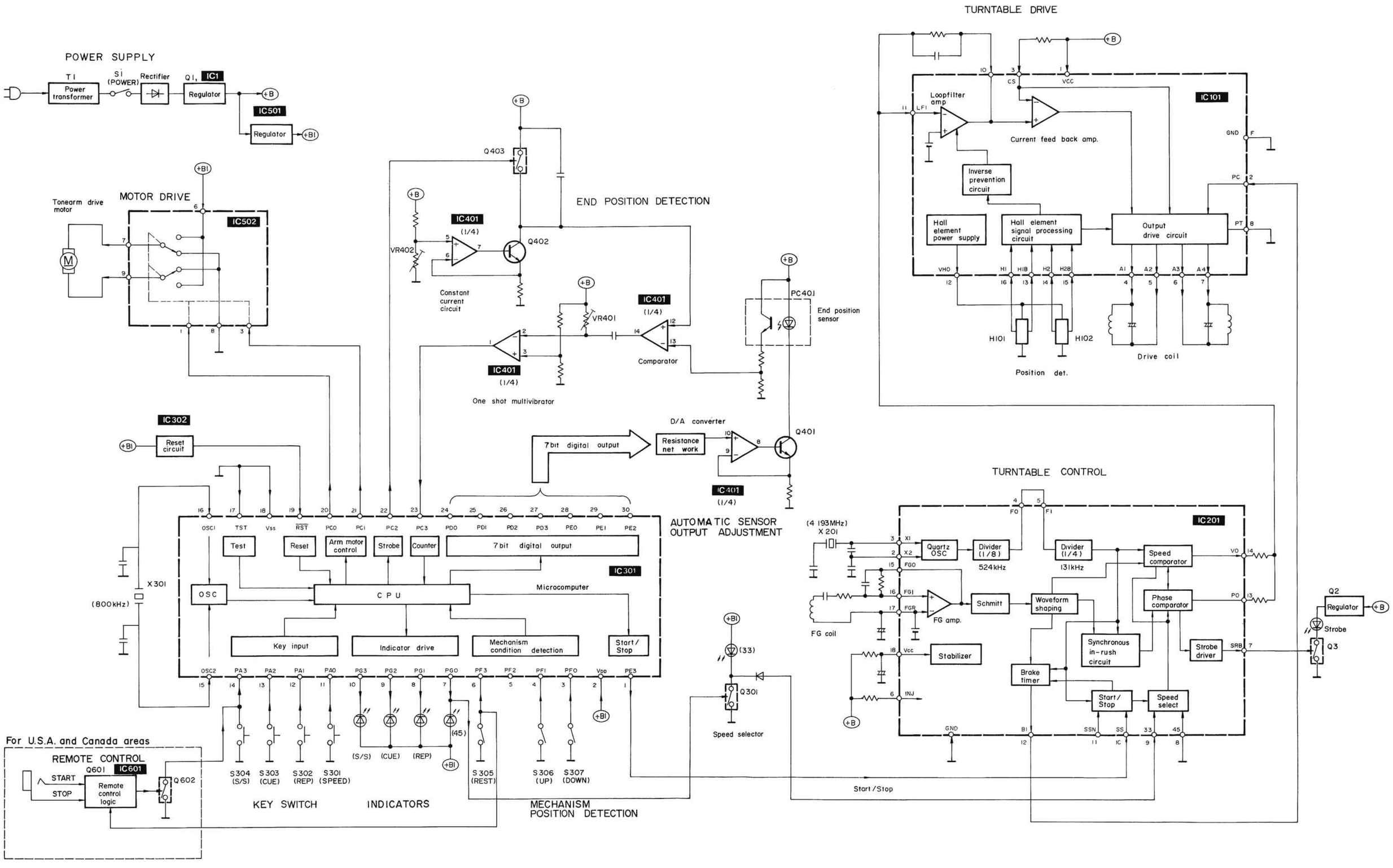

■ CIRCUIT BOARD AND WIRING CONNECTION DIAGRAM

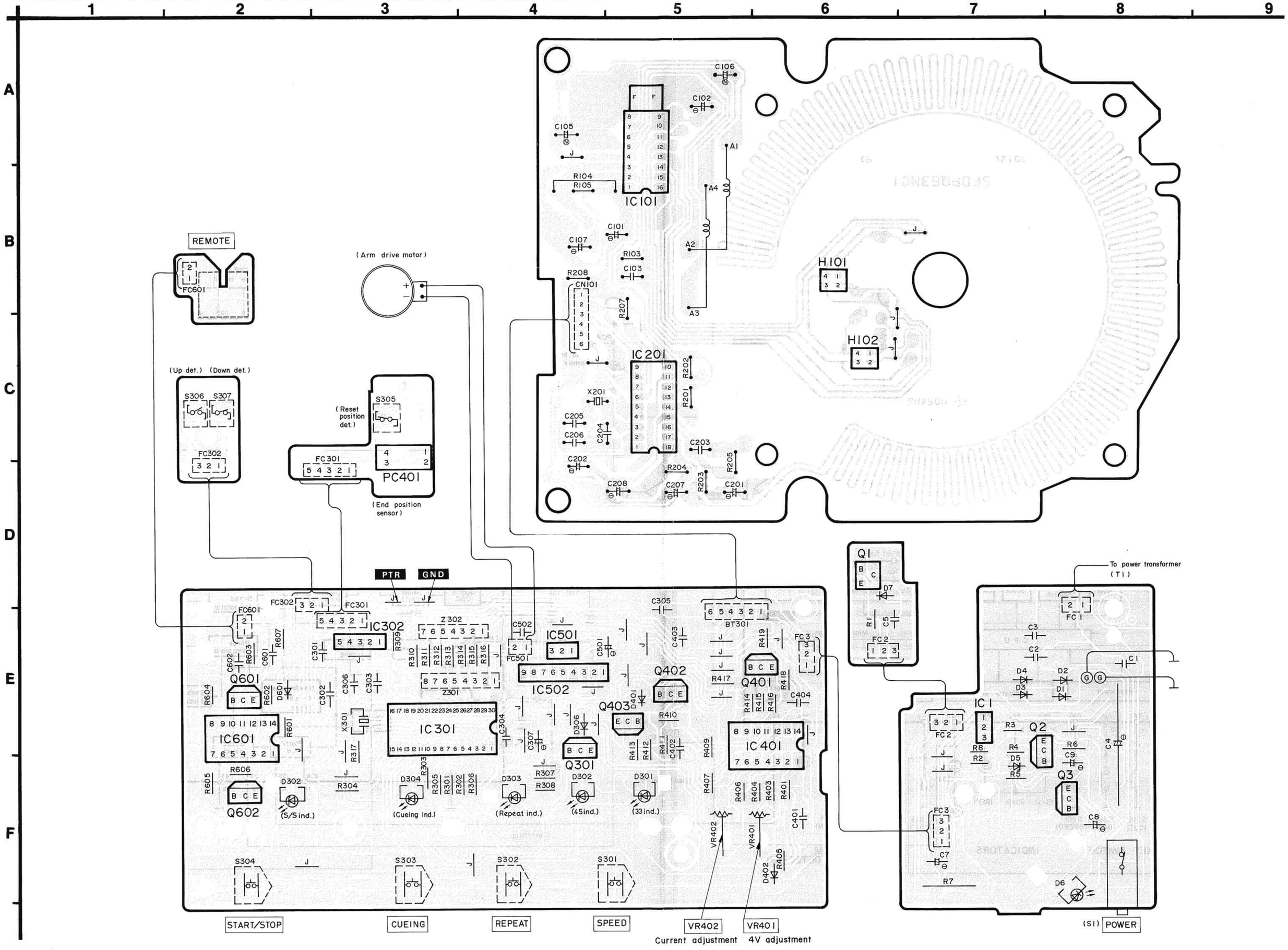

■ SCHEMATIC DIAGRAM (This schematic diagram may be modified at any time with development of new technology.)

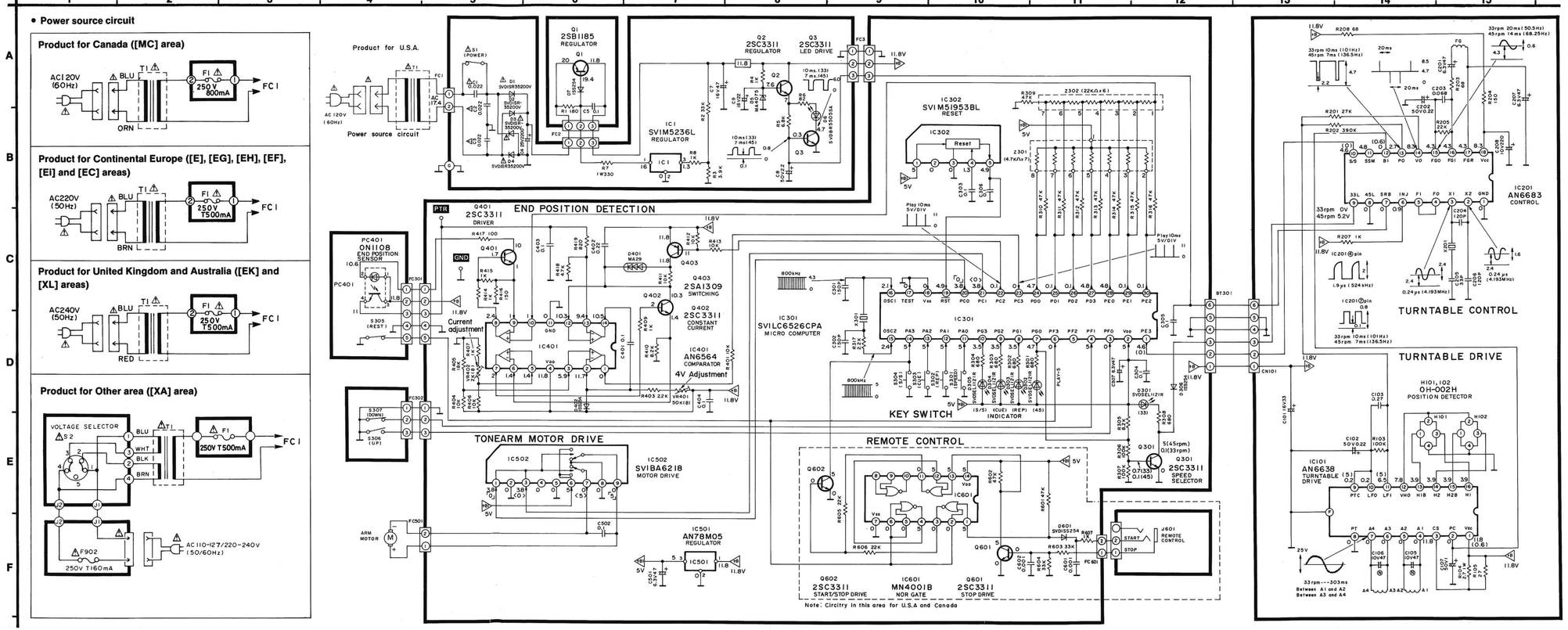

Notes:

1. S1 : Power switch in "**on**" position.
2. S2 : Voltage selector switch in "**220-240V**" position. (For [XA] area only)
3. S301 : Speed select switch.
4. S302 : Repeat switch.
5. S303 : Cueing switch.
6. S304 : Start/stop switch.
7. S305 : Rest position detection switch in "**on**" position. (Tonearm is in the rest position.)
8. S306 : Mechanism position detection (up) switch in "**off**" position. (Tonearm is in the rest position.)
9. S307 : Mechanism position detection (down) switch in "**on**" position. (Tonearm is in the rest position.)
10. The voltage value and waveform are the standard values (stop mode) of this measured by DC electronic voltmeter (high impedance) and oscilloscope on the basis of chassis. Therefore, the voltage value and waveform may include some error due to the internal impedance of the tester or the measuring unit.
    - * ( ) is the voltage when turntable is in rotation.
    - * [ ] is the voltage when arm motor is in normal rotation mode.
    - * < > is the voltage when arm motor is in reverse rotation mode.
11. Important safety notice: Components identified by ⚠ mark have special characteristics important for safety. When replacing any of these components, use only manufacturer's specified parts.

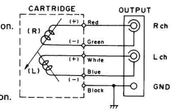

Caution!

IC and LSI are sensitive to static electricity. Secondary trouble can be prevented by taking care during repair.

- Cover the parts boxes made of plastics with aluminum foil.
- Ground the soldering iron.
- Put a conductive mat on the work table.
- Do not touch the legs of IC or LSI with the fingers directly.

• Product for MC only

FUSE REPLACEMENT

Symbol located near the fuse indicates fast operating type. For continued protection against fire hazard, replace with same type fuse. Refer to the symbol for fuse rating.

FUSIBLE REMPLACEMENT

Le symbole qui se trouve près du fusible singifie un fusible à action rapide. Pour une protection continue contre les risques d'incendie, n'utiliser que des fusibles du même type. Se rapporter au symbole pour la valeur des fusibles.

■ TERMINAL GUIDE OF IC'S, TRANSISTORS AND DIODES

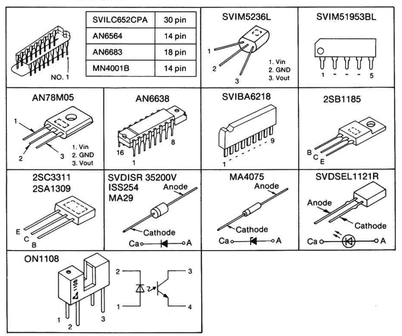

■ REPLACEMENT PARTS LIST

Notes:

1. Part numbers are indicated on most mechanical parts. Please use this part number for parts order.
2. Important safety notice:
   Components identified by ⚠ mark have special characteristics important for safety.
   When replacing any of these components, use only manufacturer's specified parts.
3. Ⓚ-marked parts are used for black type only, while ○-marked parts are for silver type only.
4. Parts other than Ⓚ-and ○-marked are used for both black and silver type.
5. Bracketed indications in Ref. No. columns specify the area. Parts without these indications can be used for all areas.
6. The "Ⓢ" mark is service standard parts and may differ from production parts.
7. The parenthesized numbers in the column of description stand for the quantity per set.

Unless otherwise specified.
All resistors are in OHMS (Ω) K=1000Ω, M=1000kΩ
All capacitors are in MICROFARADS (μF), P=10^{-6}μF.

Ref. No.	Part. No.	Description
INTEGRATED CIRCUITS		
IC1	SVIM5236L	IC
IC101	AN6638	IC
IC201	AN6683	IC
IC301	SVILC6526CPA	IC
IC302	SVIM51953BL	IC
IC401	AN6564	IC
IC501	AN78M05	IC
IC502	SVIBA6218	IC
IC601 [M,MC] only	MN4001B	IC
TRANSISTORS		
Q1	2SB1185DEF	Transistor
Q2, 3	2SC3311	Transistor
Q301	2SC3311	Transistor
Q401, 402	2SC3311	Transistor
Q403	2SA1309	Transistor
Q601, 602 [M,MC] only	2SC3311	Transistor
DIODES		
D1~4	⚠SVD1SR35200V	Rectifier
D5	MA4075	Zener Diode
D6	SVDBR5505SA	LED
D7	1SS254	Diode

Ref. No.	Part. No.	Description
D301~305	SVDSEL1121R	LED
D306	1SS254	Diode
D401	MA29TA	Diode
D402	1SS254	Diode
D601 [M,MC] only	SVD1SS254	Diode
OSCILLATORS		
X201	SVQNR41TR	Crystal, 4.193 MHz
X301	SVFCSB800D	Ceramic, 800 kHz
VARIABLE RESISTOR		
VR401	EVN61AA00B54	Variable Resistor, 50kΩ (B)
VR402	EVN61AA00B23	Variable Resistor, 2kΩ (B)
PHOTO INTERRUPTOR		
PC401	ON1108	End Position Sensor
COMPONENT COMBINATION		
Z301	EXBP87472KR	4.7kΩ×7
Z302	EXBS86223KR	22kΩ×6
HALL ELEMENT		
H101, 102	OH-002	Hall Element

Ref. No.	Part. No.	Description
SWITCHES		
S1	⚠SFDSF01N02	Power
S2 [XA]	⚠SFDSHXW225-3	Voltage Selector
S301~304	EVQQS405K	Operation
S305~307	SSHB1	Rest & Mechanism Position Det.
POWER TRANSFORMER		
T1 [M]	⚠SLT48DTL3A	Power Source
T1 [MC]	⚠SLT48DT11C	Power Source
T1 [EK, XL]	⚠SLT48DTE13E	Power Source
T1 [XA]	⚠SLT57DT7E	Power Source
T1 [Other]	⚠SLT48DT10E	Power Source
FUSES		
F1 [MC] only	⚠XBA2F08NU100	250V, 800mA
F1 except [M]	⚠XBA2C05TB0	250V, T500mA
F902 [XA] only	⚠XBA2C016TB0	250V, T160mA

• Resistors and Capacitors

Numbering System of Resistor

Example

ERD	S2	T	J	101
Type (Carbon)	Wattage (1/4W)	Shape	Tolerance (±5%)	Value (100Ω)
ERG	1	AN	J	2R2
Type (Metol Oxide)	Wattage (1W)	Shape	Tolerance (±2%)	Value (2.2Ω)
ERD	2	FC	G	101
Type (Carbon)	Wattage (1/4W)	Shape Peculiarity	Tolerance (±2%)	Value (100Ω)

Numbering System of Capacitor

Example

ECE	A or B	0J	U	470	
Type (Electrolytic)	Shape	Voltage (6.3V)	Peculiarity use	Value (47μF)	
ECQ	G	1	223	K	Z
Type (Plastic Film)	Peculiarity	Voltage (100V DC)	Value (0.022μF)	Tolerance (±10%)	Shape
ECK	R	1H	473	Z	V
Type (Ceramic)	Shape	Voltage (50V DC)	Value (0.047μF)	Tolerance $^{+80}_{-20}$ %	Peculiarity

Type	Voltage: ECE Type	Voltage: Others	Tolerance
ECE : Electrolytic	0J : 6.3V	1C : 16V DC	K : ±10%
ECK, ECF, ECC : Ceramic	1A : 10V	1E : 25V DC	Z : $^{+80}_{-20}$ %
	1C : 16V	05 : 50V DC	
	1E : 25V	1H : 50V DC	
ECQ : Plastic Film	1V : 35V	1 : 100V DC	
	1H : 50V		
	1J : 63V		

Ref. No.	Part No.	Value
RESISTORS		
R1	ERDS2TJ181	180
R2	ERDS2TJ333	33K
R3	ERDS2TJ392	3.9K
R4	ERDS2TJ102	1K
R5	ERDS2TJ682	6.8K
R6	ERDS2TJ820	82
R7	ERG1ANJ331	330
R8	ERDS2TJ102	1K
R103	ERDS2TJ104	100K
R104	ERX1ANJ2R7	2.7
R105	ERDS2TJ270	27
R201	ERDS2TJ273	27K
R202	ERDS2TJ394	390K
R203	ERDS2TJ680	68
R204	ERDS2TJ151	150

Ref. No.	Part No.	Value
R205	ERDS2TJ223	22K
R207	ERDS2TJ102	1K
R208	ERDS2TJ680	68
R301, 302	ERDS2TJ681	680
R303, 304	ERDS2TJ681	680
R305	ERDS2TJ822	8.2K
R306, 307	ERDS2TJ104	100K
R308	ERDS2TJ681	680
R309, 310	ERDS2TJ473	47K
R311, 312	ERDS2TJ473	47K
R313, 314	ERDS2TJ473	47K
R315, 316	ERDS2TJ473	47K
R317	ERDS2TJ222	2.2K
R401	ERDS2TJ103	10K
R403	ERDS2TJ222	2.2K
R404	ERDS2TJ103	10K
R405	ERDS2TJ183	18K

Ref. No.	Part No.	Value
R406	ERDS2TJ103	10K
R407	ERDS2TJ102	1K
R409	ERDS2TJ102	1K
R410	ERDS2TJ822	8.2K
R411	ERDS2TJ103	10K
R412, 413	ERDS2TJ103	10K
R414, 415	ERDS2TJ102	1K
R416	ERDS2TJ151	150

Ref. No.	Part No.	Value
R417	ERDS2TJ101	100
R418	ERDS2TJ472	4.7K
R419	ERDS2TJ821	820
R601, 602	ERDS2TJ473	47K
R603, 604	ERDS2TJ333	33K
R605, 606	ERDS2TJ223	22K
R607	ERDS2TJ102	1K

Ref. No.	Part No.	Value
CAPACITORS		
C1	⚠ ECQG1223KZ	0.022
C2, 3	⚠ ECKR1H223ZF	0.022
C4	ECEB1EU222	2200
C5	ECFR1H104ZFM	0.1
C7	ECEA1CU470	47
C8	ECEA1HU2R2	2.2
C9	ECEA1CU220	22

Ref. No.	Part No.	Value
C101	ECEA1CU330	33
C102	ECEA50ZR22	0.22
C103	ECQV05274JZ	0.27
C105, 106	ECEA1AN470S	47
C107	ECEA1HU010	1
C201	ECEA0JU470	47
C202	ECEA50ZR22	0.22
C203	ECQM1H683KZ	0.068

Ref. No.	Part No.	Value
C204	ECCD1H121KC	120P
C205	ECCD1H330JC	33P
C206	ECCD1H121KC	120P
C207	ECEA0JU470	47
C208	ECEA1AU221	220
C301, 302	ECCR1H151K	150P
C303	ECQG1H104KZT	0.1
C304, 305	ECFR1E104ZFM	0.1

Ref. No.	Part No.	Value
C306	ECFR1E104ZFM	0.1
C307	ECEA0JU470	47
C401	ECQG1H104KZT	0.1
C402	ECQG1H224KZW	0.22
C403, 404	ECFR1E104ZFM	0.1
C501	ECEA0JU470	47
C502	ECFR1E104ZFM	0.1
C601, 602	ECKR1H102ZF	0.001

Ref. No.	Part. No.	Description	
CABINET AND CHASSIS PARTS			
1	SFADZ15R01E	Dust Cover	(1)
1-1	SFGZD04N01	Rubber Cushion	(2)
2	SHOB5	Turntable Mat	(1)
3	SHRB15E	Base, Disc Size Sensor	(1)
4	SFTEQD3N01	Turntable Platter	(1)
5	SFTMC07-01E	Magnet	(1)
6	SFMGQ34N01	Cover, Stator Coil	(1)
7	SFMZQ63M53A	Stator Flame Ass'y	(1)
8 [XA]	SFGCC05X01	Cushion Rubber	(2)
8 [Other]	SFGCC05N02	Cushion Rubber	(2)
9	SFGZC05N03	Cushion Rubber	(1)
10	SFUPC05N02	Shield Plate	(1)
11 ○	SKMB36-0S	Plate	(1)
11 Ⓚ	SKMB36-0K	Plate	(1)
12 ○	SBCB100-0S	Button	(1)
12 Ⓚ	SBCB100-0C	Button	(1)
13	SUWB9	Lever, Button	(1)
14	SHRB40	Bracket	(1)
15	SFUMBD2N07	Strobe Cover	(1)
16	SFUMBD2N06	Holder	(1)
17 [M,MC]	SGXB130-00D	Ornament Plate	(1)
17 [Other]	SGXB130-00E	Ornament Plate	(1)
18 ○	SBCB120-0S	Button	(1)
18 Ⓚ	SBCB120-0C	Button	(1)
19	SHRB41	Holder	(1)
20	SKUB3-1	Bottom Cover	(1)
21	SFQCQD3N01	Spring, Insulator	(4)
22	SKLB2	Insulator	(4)
23 ○	SFGK170-01	Rubber Cap	(2)
23 Ⓚ	SFGK171F01	Rubber Cap	(2)
24	SMCB2	Shield Plate	(1)
25	SFDJBD2N03	Terminal Plate	(1)
26 ○	SKMLQD33-SM	Cabinet	(1)
26 Ⓚ	SKMLQD33-KM	Cabinet	(1)
27 [M]	SGTB52	Name Plate	(1)
27 [MC]	SGTB53	Name Plate	(1)
27 [E,EC]	SGTB54	Name Plate	(1)
27 [EG]	SGTB55	Name Plate	(1)
27 [EK]	SGTB57	Name Plate	(1)
27 [XA]	SGTB67	Name Plate	(1)
27 [XL]	SGTB98	Name Plate	(1)
27 [Other]	SGTB56	Name Plate	(1)
28	SGXB230	Plate	(1)
29 ○ except [M, MC]	SKMB55-0S	Cover	(1)
29 Ⓚ except [M, MC]	SKMB55-0K	Cover	(1)

Ref. No.	Part. No.	Description	
30 ○ except [XA]	SKMB35-0S	Cover	(1)
30 Ⓚ except [XA]	SKMB35-0K	Cover	(1)
31	SFKUMA1N01E	Tonearm Rest	(1)
32	SFATZ15R01A	Hinge	(2)
33	⚠SJSB4	AC Socket	(1)
34 [M,MC] only	SJJ130-1	Jack, Remote control	(1)
TONEARM PARTS			
41	SFPAMQD201A	Tonearm Ass'y	(1)
42 except [M, MC]	EPC-P30	★Cartridge	(1)
43 except [M, MC]	EPS-30ES	★Stylus	(1)
44 except [M, MC]	SFCNC03301	Cover	(1)
45	SUXB4	Shaft	(1)
46	SFUMBD2N51	Lift Arm	(1)
47	SUWLQD33-KM	Arm Base	(1)
48	SUSB1	Spring	(1)
49	SHRB48	Lever	(1)
50	SFGZN05N51	Cushion Rubber	(1)
51	SUSB14	Spring	(1)
52	SHRB12	Plate, Index	(1)
53	SHRB38	Sub Plate, Index	(1)
54	SUSB42	Spring	(1)
55	SUWB10E	Plate, Pidk-up Fixing	(1)
55-1	SUSB22	Spring	(1)
56	SFGZZ15R02	Spacer	(2)
57	SHRB32-1	Holder	(1)
58	SHRB43-1	Pin	(1)
MECHANISM PARTS			
61	SUKB6E	Mechanism Plate	(1)
62	SDGB3	Main Gear	(1)
63	SFUMB63M51	Movable Piece	(1)
64	SFGZB63M51	Cushion Rubber	(1)
65	SUSB31	Spring	(1)
66	SHRB47	Lever	(1)
67	SMNLQD33-KM	Motor Ass'y	(1)
68	SHGB11	Cushion Rubber	(1)
69	SDGB6	Wheel	(1)
70	SHRB62	Holder	(1)
71	SHRB64	Pin	(2)
72	SHRB63	Lever	(1)
73	SUSB42	Spring	(1)
SCREWS AND WASHERS			
N1	XTV3+10G	Screw, ⊕3×10	(17)
N2	SFXWC06N02	Washer	(1)
N3	XTN3+6J	Screw, ⊕3×6	(3)
N4	XYN3+C8S	Screw, ⊕3×8	(1)
N5	XTV3+6J	Screw, ⊕3×6	(4)
N6	SNSB4	Screw	(4)
N7	XTW3+14QFYR	Screw, ⊕3×14	(1)
N8	SFPEV0Q601	Screw	(1)
N9	SNSB1	Screw	(2)

Ref. No.	Part. No.	Description	
N10	XWC3B	Washer, φ3	(2)
N11	SFXGQ34N02	Screw	(1)
N12	XUC3FY	Washer, φ3	(2)
N13	XYN26+C5	Screw, ⊕2.6×5	(3)
N14	XTV3+35J	Screw, ⊕3×35	(1)
N15	XTV3+8J	Screw, ⊕3×8	(2)
N16	XTV3+8G	Screw, ⊕3×8	(5)
N17	SNSB5	Screw	(2)
ACCESSORIES			
A1 [M]	SQX54018-1	Instruction Book	(1)
A1 [MC]	SQXLQD33-KMC	Instruction Book	(1)
A1 [EK]	SQX54020	Instruction Book	(1)
A1 [EG]	SQX54021	Instruction Book	(1)
A1 [EF]	SQX54022	Instruction Book	(1)
A1 [EI]	SQX54023	Instruction Book	(1)
A1 [XL, XA]	SQX54024	Instruction Book	(1)
A1 [Other]	SQXLQD33-KE	Instruction Book	(1)
A2 [M, MC]	⚠SJA170	AC Cord	(1)
A2 [EK]	⚠SFDAC05G02	AC Cord	(1)
A2 [XL]	⚠SJA163	AC Cord	(1)
A2 [XA]	⚠SJA168-1	AC Cord	(1)
A2 [Other]	⚠SFDAC05E02	AC Cord	(1)
A3	SFDHBD2N01	Output Cord	(1)
A4	SFDLJ11N01E	Ground Wire	(1)
A5	SFWE212-01	45 Adaptor	(1)
A6 [XA] only	⚠SJP9215	Adaptor	(1)
A7 [M, MC] only	SJP2257K	Remoto Control Cord	(1)
PACKING PARTS			
P1 [M] ○	SPGB26	Carton Box	(1)
P1 [M] Ⓚ	SPGB47	Carton Box	(1)
P1 [MC] ○	SPGB27	Carton Box	(1)
P1 [MC] Ⓚ	SPGB48	Carton Box	(1)
P1 [EF] ○	SPGB54	Carton Box	(1)
P1 [EF] Ⓚ	SPGB69	Carton Box	(1)
P1 [Other] ○	SPGB53	Carton Box	(1)
P1 [Other] Ⓚ	SPGB68	Carton Box	(1)
P2	SFHHBD3N01	Pad, Left	(1)
P3	SFHHBD3N02	Pad, Right	(1)
P4	SFHZBD2N01	Pad, Tonearm Weight	(1)
P5	SFHZB63M01	Clamper, Tonearm	(1)
P6	SPEB3	Clamper, Turntable	(2)
P7	SFYH60X60	Polyethylene Bag, Unit	(1)
P8	SPPB1	Polyethylene Bag, Dust Cover	(1)
P9	SFYF32A35	Polyethylene Bag, Turntable Mat	(1)
P10	SPSB10	Pad, Turntable Mat	(1)

■ EXPLODED VIEW

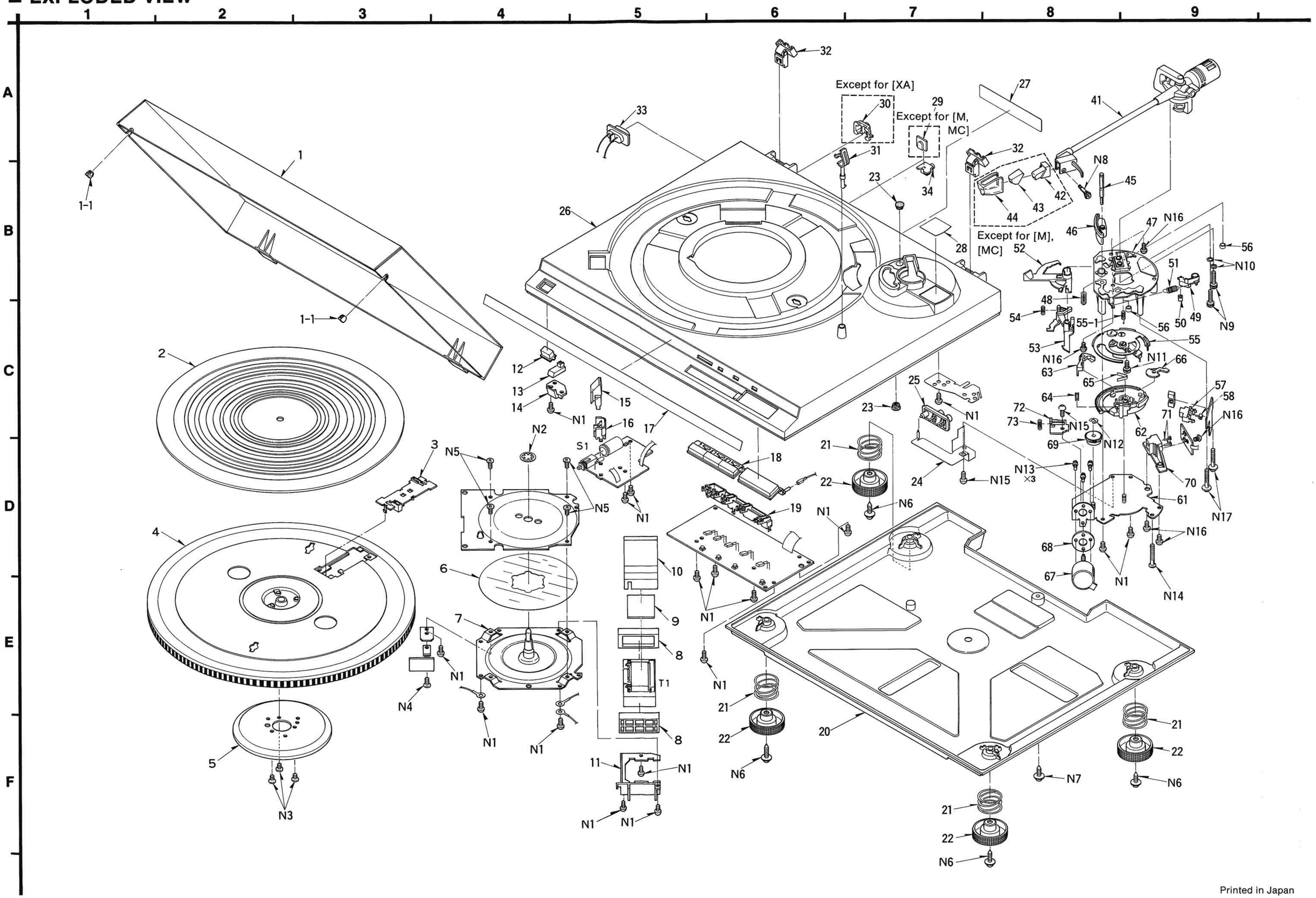

Printed in Japan
860512000 Ⓢ TK/HY