Deze download wordt u gratis aangeboden door Pick-upnaalden.nl

Web	:	www.pickupnaalden.com
Email	:	info@pick-upnaalden.nl
Facebook	:	www.facebook.com/pickupnaalden
Twitter	:	twitter.com/Pickupnaalden
Google+	:	https://plus.google.com/+FCaris_pickupnaalden

PS-LX5/LX5C

PS-LX5:

US Model
Canadian Model
AEP Model
UK Model
E Model

PS-LX5C:

US Model

STEREO TURNTABLE SYSTEM

SPECIFICATIONS

Turntable

Platter	31 cm (12¼ in.), aluminum-alloy diecast
Motor	Linear torque BSL (brushless and slotless) motor
Drive system	Direct drive
Control system	Quartz lock control, magnedisc servo control system
Speed	33⅓ rpm, 45 rpm
Starting characteristics	Comes to nominal speed within a ½ revolution (33⅓ rpm)
Wow and flutter	0.02% (WRMS)* 0.025% (WRMS) ±0.04% (DIN)
Signal-to-noise ratio	78 dB (DIN-B)
Load characteristics	0% up to 100 g stylus force (at lead-in groove of a record)
Speed deviation	Within ±0.003%
Automatic system	Lead-in, return, reject, repeat, record size selection

Tonearm

Type	Statically balanced
Pivot-to-stylus length	216.5 mm (8⅝ in.)
Overhang	16.5 mm (21/32 in.)
Stylus force adjustment range	0 - 3 g
Cartridge shell weight	PS-LX5 (US, Canadian model): 5.2 g (SH-151) PS-LX5C (US model): 4.7 g (SH-94)
Cartridge weight range (including a cartridge shell)	7.4—11.7 g 10.9—15.2 g [with extra weight for the PS-LX5 (US, Canadian model)]

— Continued on page 2 —

SAFETY-RELATED COMPONENT WARNING!!

COMPONENTS IDENTIFIED BY SHADING AND MARK ⚠ ON THE SCHEMATIC DIAGRAMS, EXPLODED VIEWS AND IN THE PARTS LIST ARE CRITICAL TO SAFE OPERATION. REPLACE THESE COMPONENTS WITH SONY PARTS WHOSE PART NUMBERS APPEAR AS SHOWN IN THIS MANUAL OR IN SUPPLEMENTS PUBLISHED BY SONY.

ATTENTION AU COMPOSANT AYANT RAPPORT À LA SÉCURITÉ!

LES COMPOSANTS IDENTIFIÉS PAR UNE TRAME ET UNE MARQUE ⚠ SUR LES DIAGRAMMES SCHÉMATIQUES, LES VUES EXPLOSÉES ET LA LISTE DES PIÈCES SONT CRITIQUES POUR LA SÉCURITÉ DE FONCTIONNEMENT. NE REMPLACER CES COMPOSANTS QUE PAR DES PIÈCES SONY DONT LES NUMÉROS SONT DONNÉS DANS CE MANUEL OU DANS LES SUPPLÉMENTS PUBLIÉS PAR SONY.

SONY®

SERVICE MANUAL

Cartridge XL-200 [supplied only with PS-LX5 (AEP, UK, E model)]

Type	Moving magnet type
Frequency response	10 Hz to 30 kHz
Channel separation	25 dB at 1 kHz
Output voltage	3 mV at 1 kHz, 5 cm/sec.
Load impedance	50 to 100 kilohms
Tracking force	1 to 2 g (1.5 g recommended)
Stylus	Sony ND-200G (conical 0.6 mil diamond)
Weight	8.2 g

Cartridge VL-5 [supplied only with the PS-LX5C (US model)]

Type	Moving magnet type
Frequency response	10 Hz to 20 kHz
Channel separation	20 dB at 1 kHz
Output voltage	3.5 mV at 1 kHz, 5 cm/sec., 45°
Load impedance	47 to 100 kilohms
Tracking force	1.5 to 2.5 g (2 g recommended)
Stylus	Sony ND-5G (conical 0.6 mil diamond)
Weight	5.0 g

General

Power requirements	AEP model: 220 V ac, 50/60Hz UK model: 240 V ac, 50/60Hz E model: 110–120 or 220–240 V ac adjustable 50/60 Hz US, Canadian model: 120 V ac, 60 Hz
Power consumption	9 W
Dimensions	Approx. 430 × 105 × 355 mm (w/h/d) (17 × 4¼ × 14 in.) including projecting parts and controls
Weight	Approx. 6.3 kg (13 lbs 14 oz), net Approx. 7.6 kg (16 lbs 12 oz), in shipping carton

* This new measuring method concerns only the turntable assembly, including the platter. It excludes wow and flutter caused by the tonearm, the cartridge, or the record. Measured by obtaining signal from magnetic pick-up head.

MODEL IDENTIFICATION

— Specification Label —

US, Canadian model:	AC 120 V 60 Hz 9W
AEP model:	AC 220V~50/60 Hz 9W
E model:	AC 110–120 V, 220–240 V~50/60 Hz 9W
UK model:	AC 240 V~50/60 Hz 9W

Handling Precautions for MOS ICs

Generally, the insulation resistance of the oxide layer in MOS IC structures is very high, and the oxide layer is very thin. Because of this, it is possible that the static voltages usually present on clothes and the human body will be enough to generate a potential difference across the insulator, high enough to cause a breakdown of the insulating layer.

The following precautions should be taken while handling these ICs.

(Particular care should be taken under conditions of low humidity.)

Precautions in Replacing MOS ICs

1. Store new ICs by inserting them into a urethane-polyester cushion (which is somewhat conductive), or wrapping it in aluminum foil, so that all the pins are at the same potential.
   (The ICs should be stored in that manner until mounted on the circuit board.)

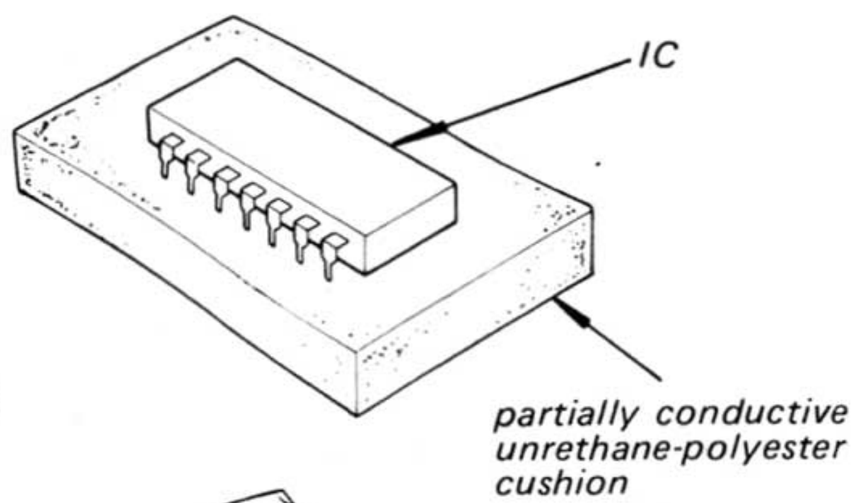

Fig. A

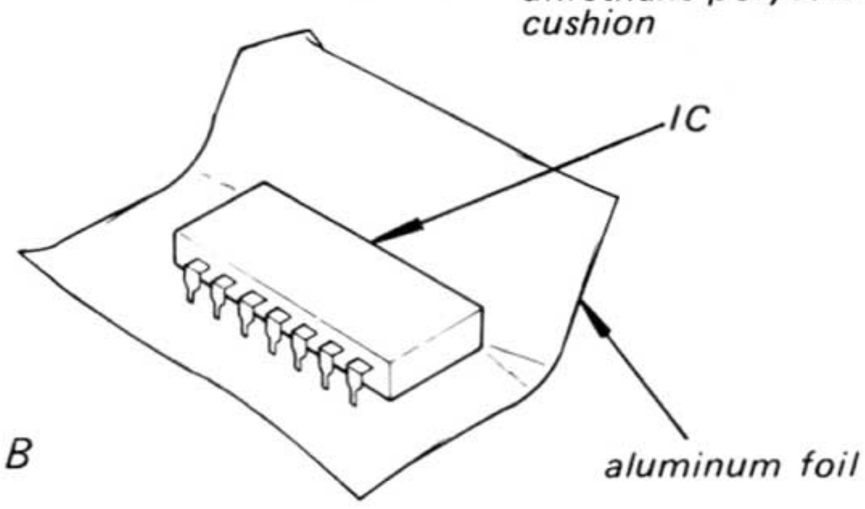

Fig. B

2. Check the soldering iron for possible power-line leakage current. Make sure that there is no leakage path by connecting an ohmmeter to the tip of the soldering iron and the plug as shown in Fig. C. If there is a leakage path, use some other soldering iron.

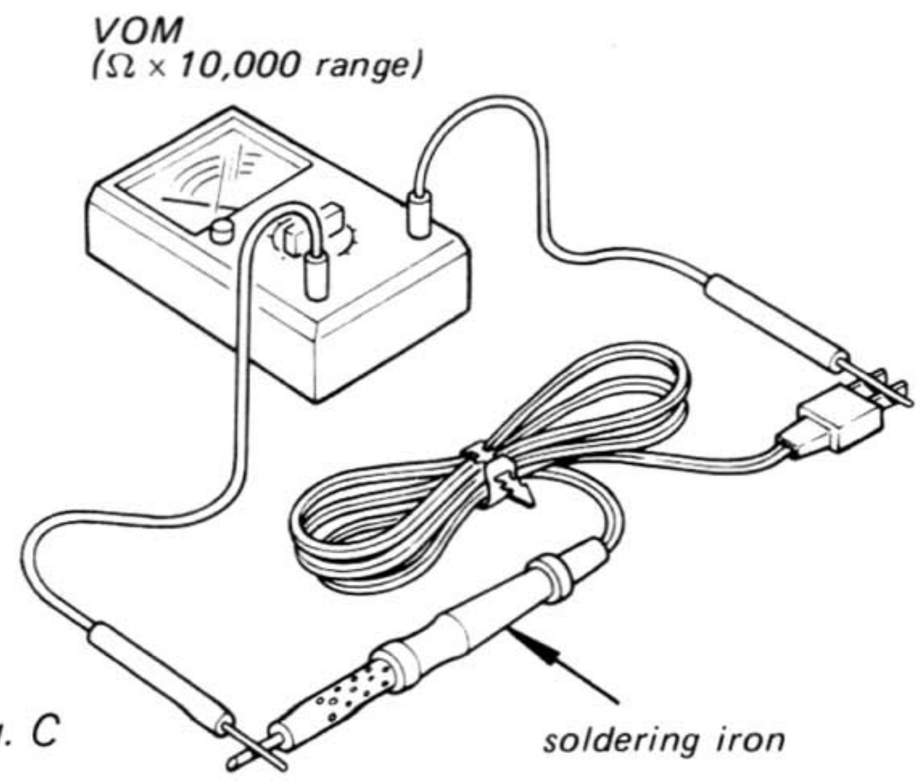

Fig. C

3. Equalize any potential difference between the clothes, the tools in use, the work bench, the set being worked on, and the packaged IC by touching them all in succession with the hands or a conductive wire or tool.

4. The following are effective methods for handling ICs that remove the potential difference across the oxide layer.
   - Use a paper clip modified by soldering in a wire braid insert.

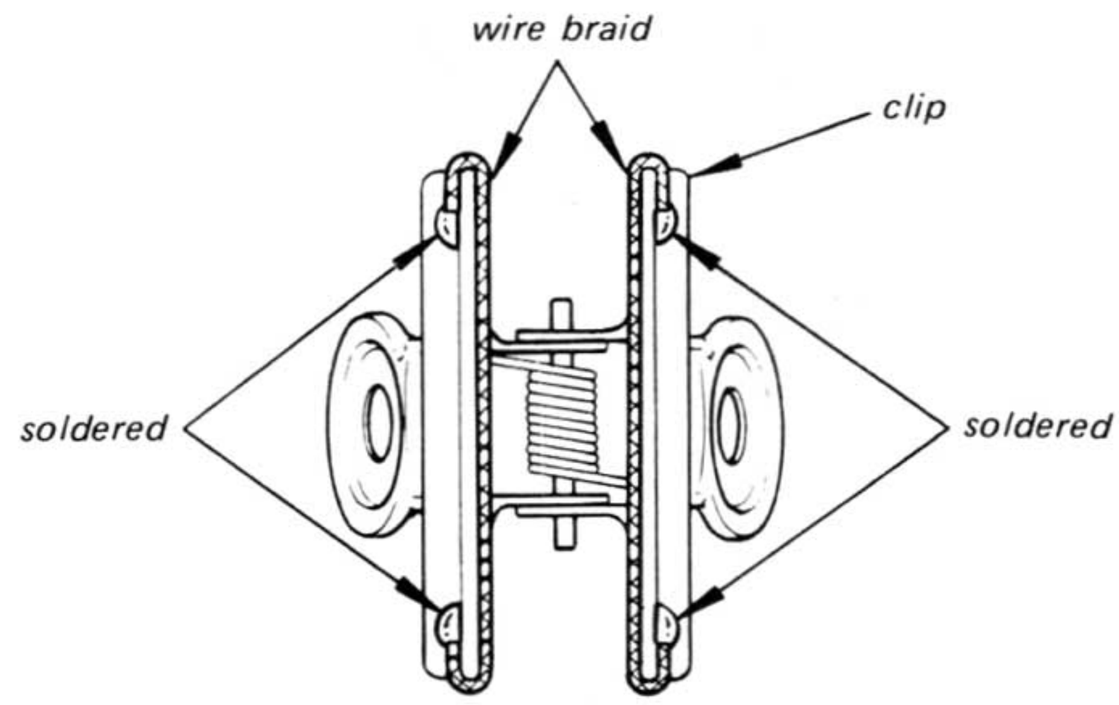

Fig. D

Make sure that there is no solder on the inside.

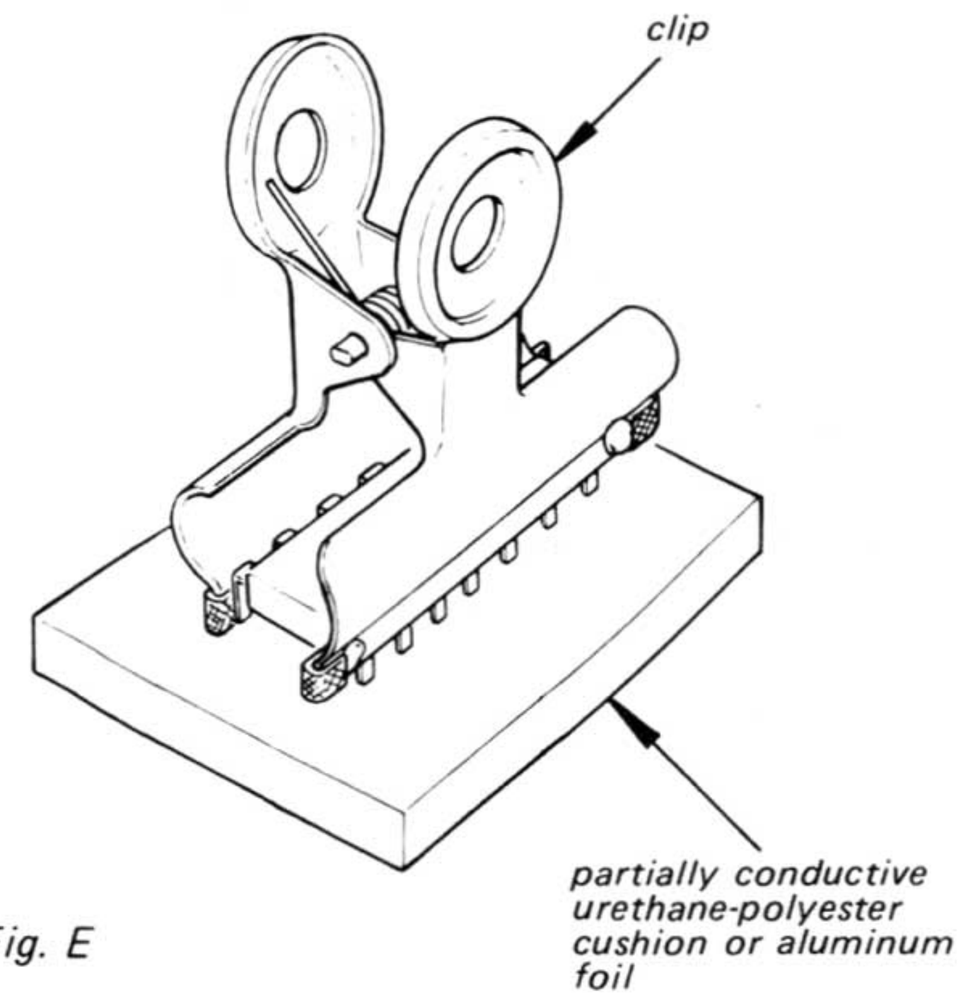

Fig. E

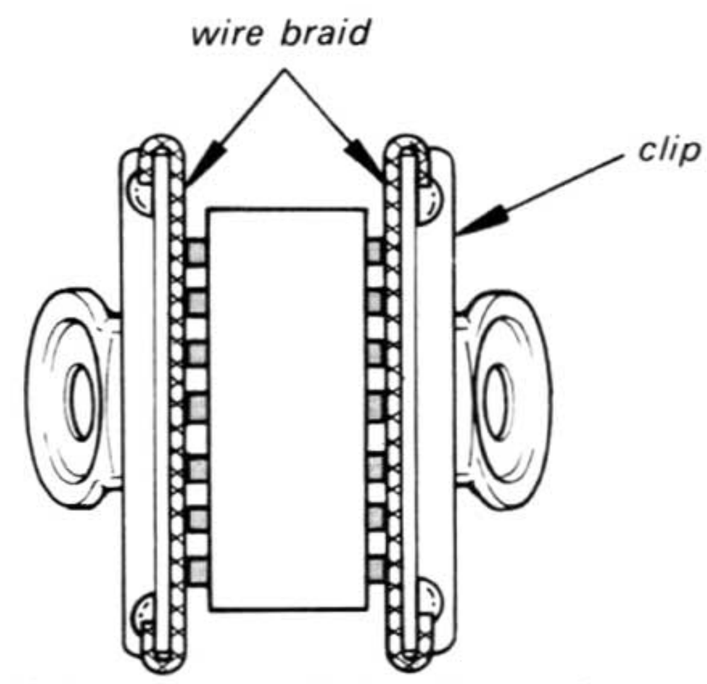

Fig. F

Make sure that all the pins are in contact with the wire braid (all the pins will then be at the same potential.).

- Take a short length of fine bare wire and wind it around the IC so that it shorts all the pins of the IC, while it is still in the urethane-polyester cushion or aluminum foil. This ensures that all the pins are at the same potential.

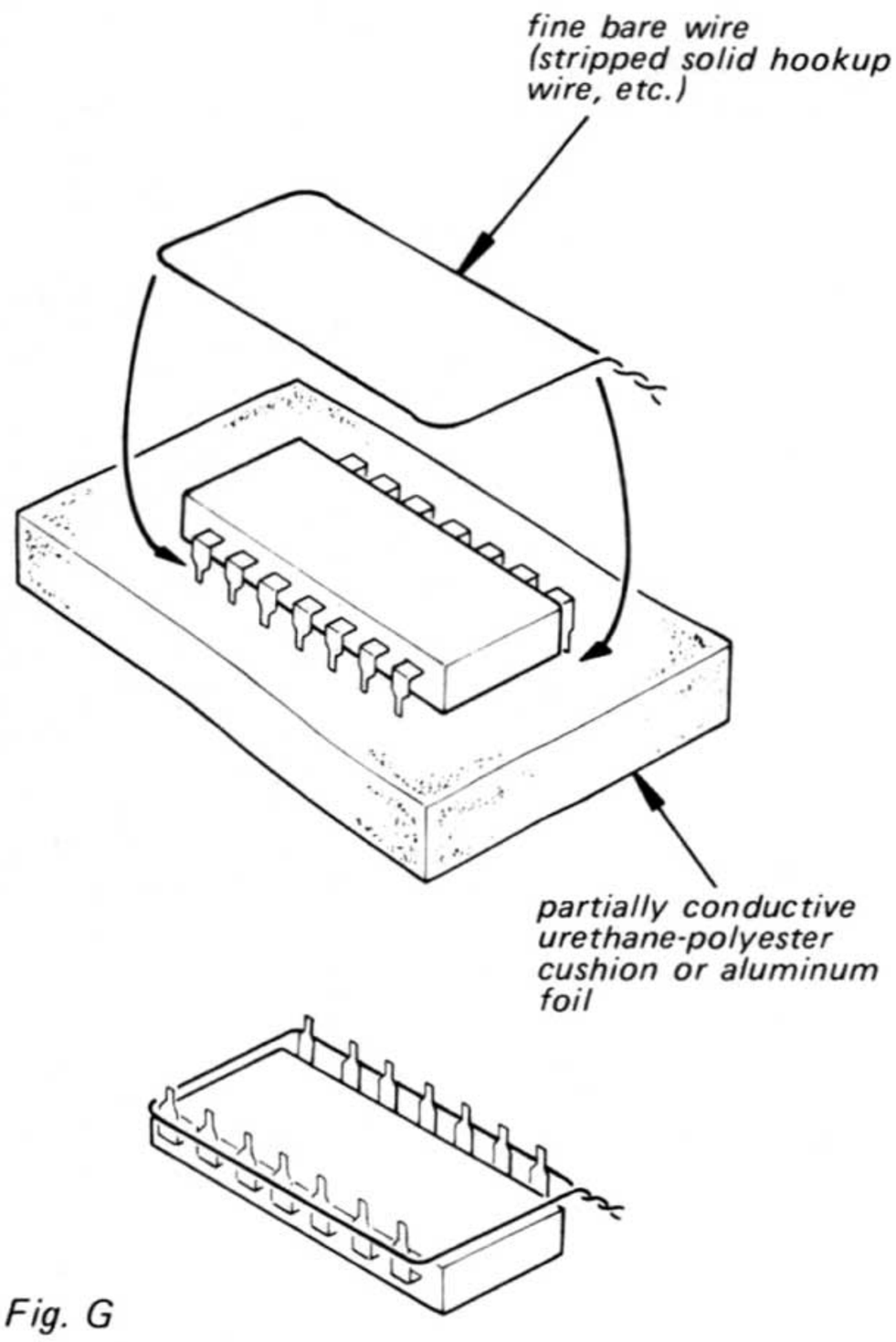

Fig. G

- When it is necessary to handle the IC with the fingers, do not touch any pin, and hold the IC at the ends of its plastic-package case as shown in Fig. H.

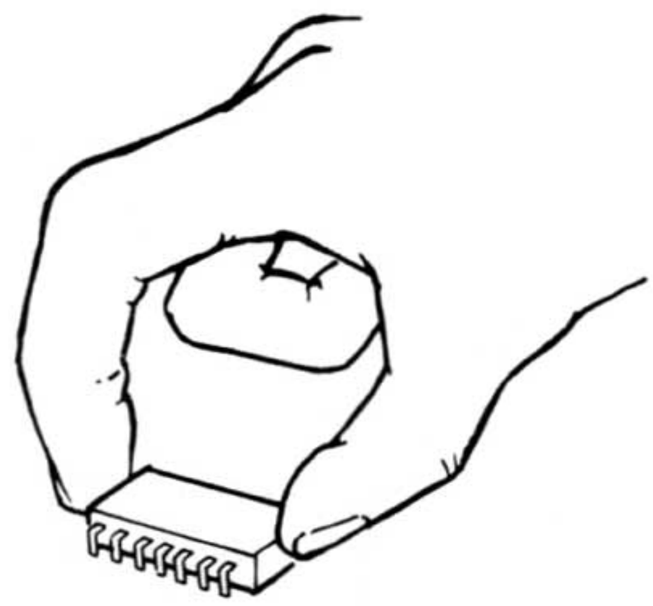

Fig. H

5. Method of Mounting
   Insert the IC while holding it with the modified clip, and solder all the pins with the clip still shorting the pins. (Similarly, solder all the pins while the bare shorting wire is still wound around them.). Remove the clip or the bare shorting wire only after all the pins have been soldered.

Precaution while Checking C-MOS ICs

The C-MOS ICs (Complementary MOS) are MOS ICs that have their output sections made up of N-channel and P-channel push-pull stages to increase their speed of operation. If the output terminal of these ICs comes into contact with B+ or B– voltage, then the FET which is ON at that time will either become shorted or open.

This is valid for all the output sections that are connected together by the interconnections. Even the circuits that are physically separated (and not on the same board) can be destroyed simultaneously.

Example:

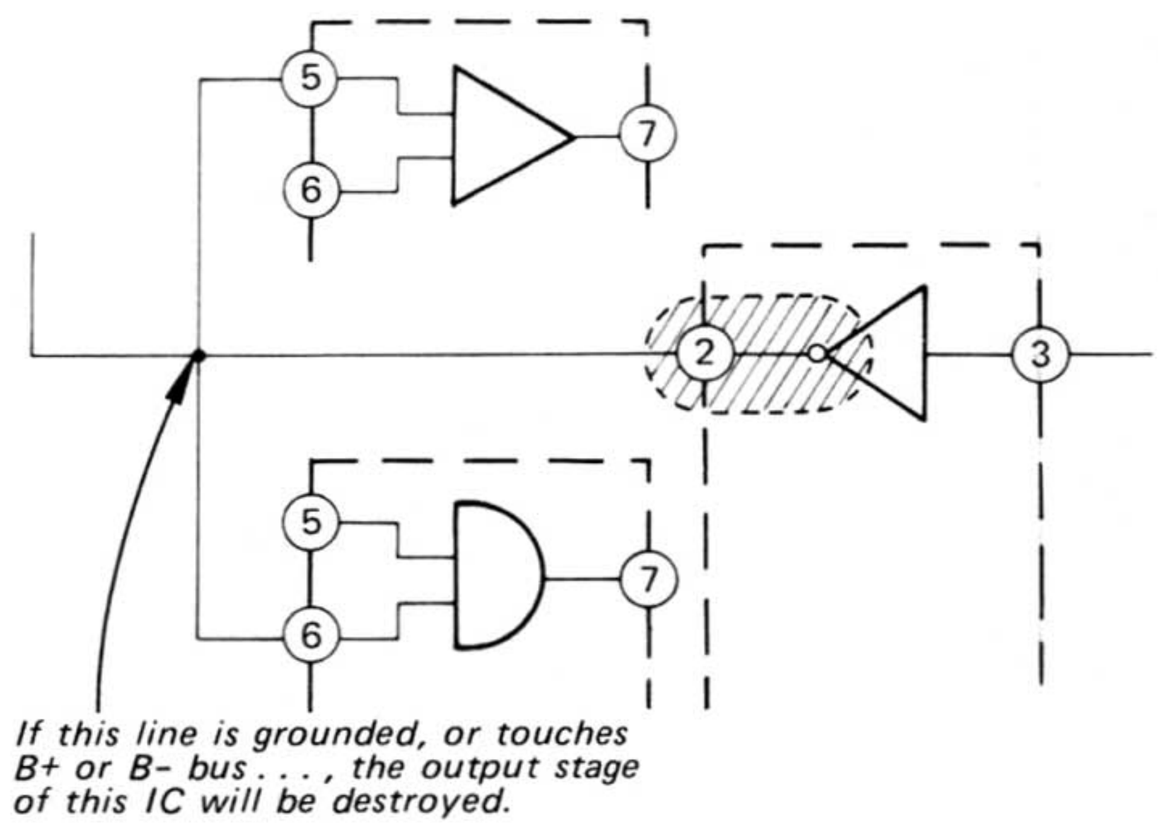

Fig. I

SECTION 1
OUTLINE

1-1. BLOCK DIAGRAM

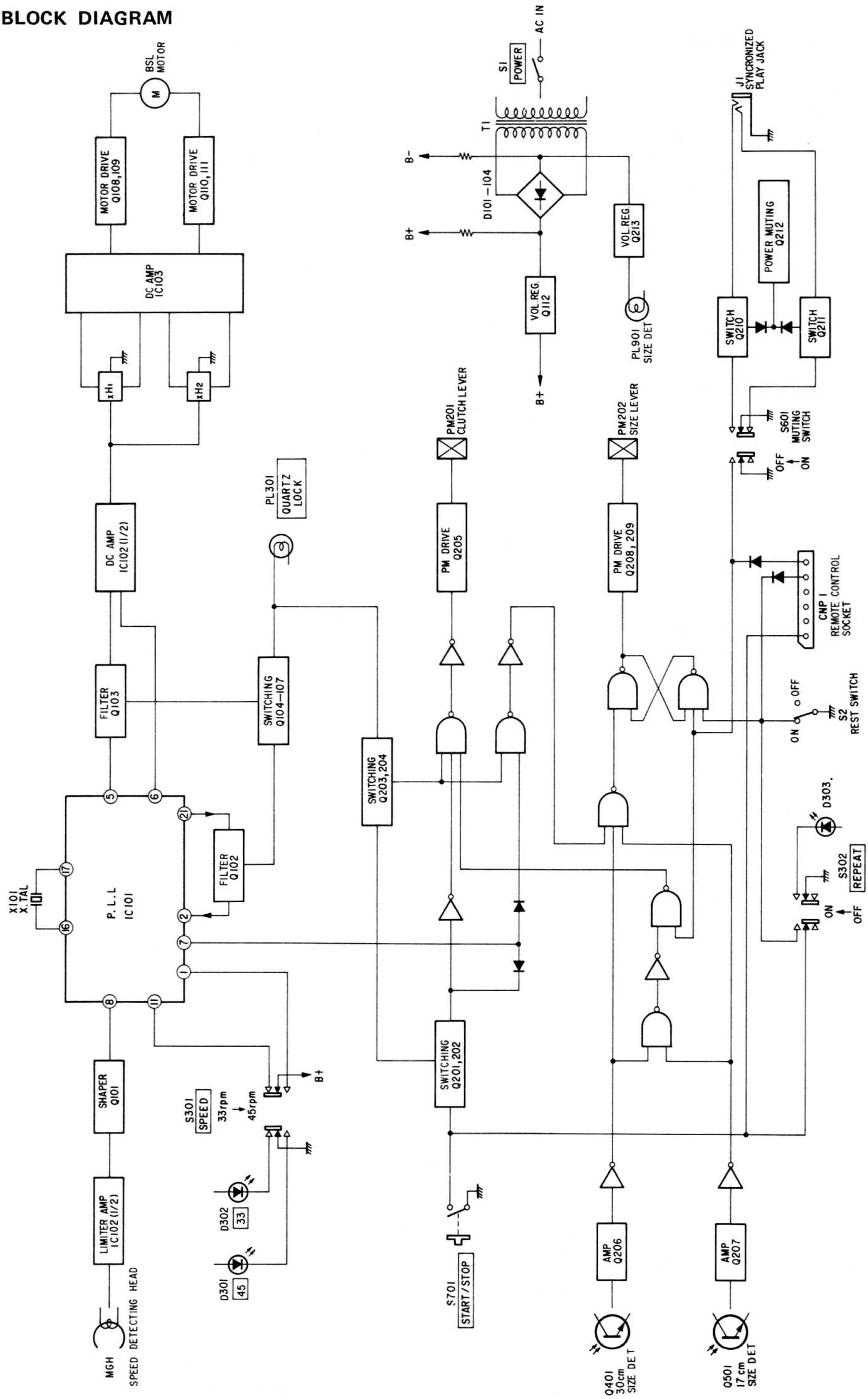

SECTION 2
DISASSEMBLY AND ASSEMBLY

Note: Follow the disassembly procedure in the numerical order given.

Bottom Plate (A) / (B) Removal

❶ Remove the turntable and the turntable sheet.

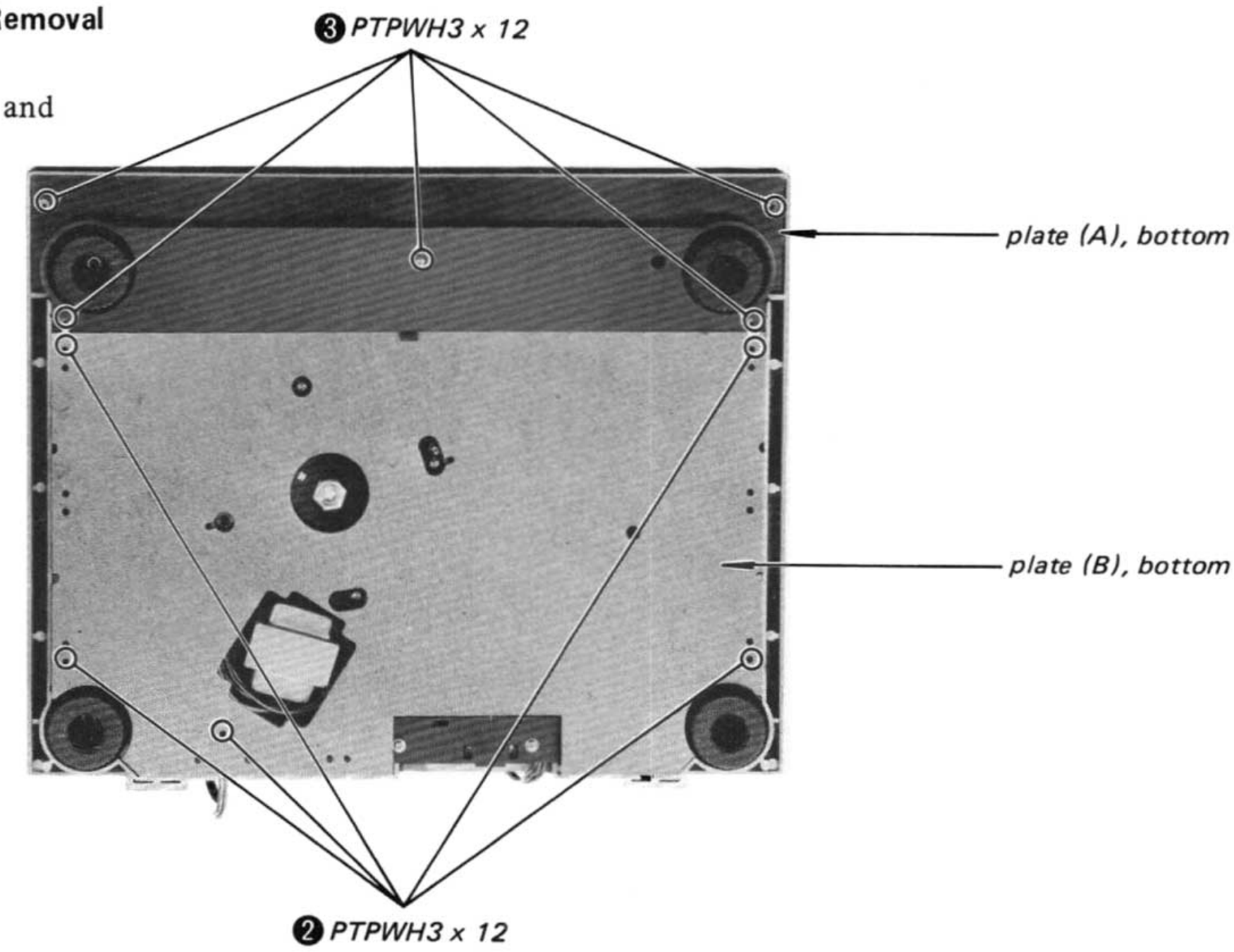

Drive Gear Assembly

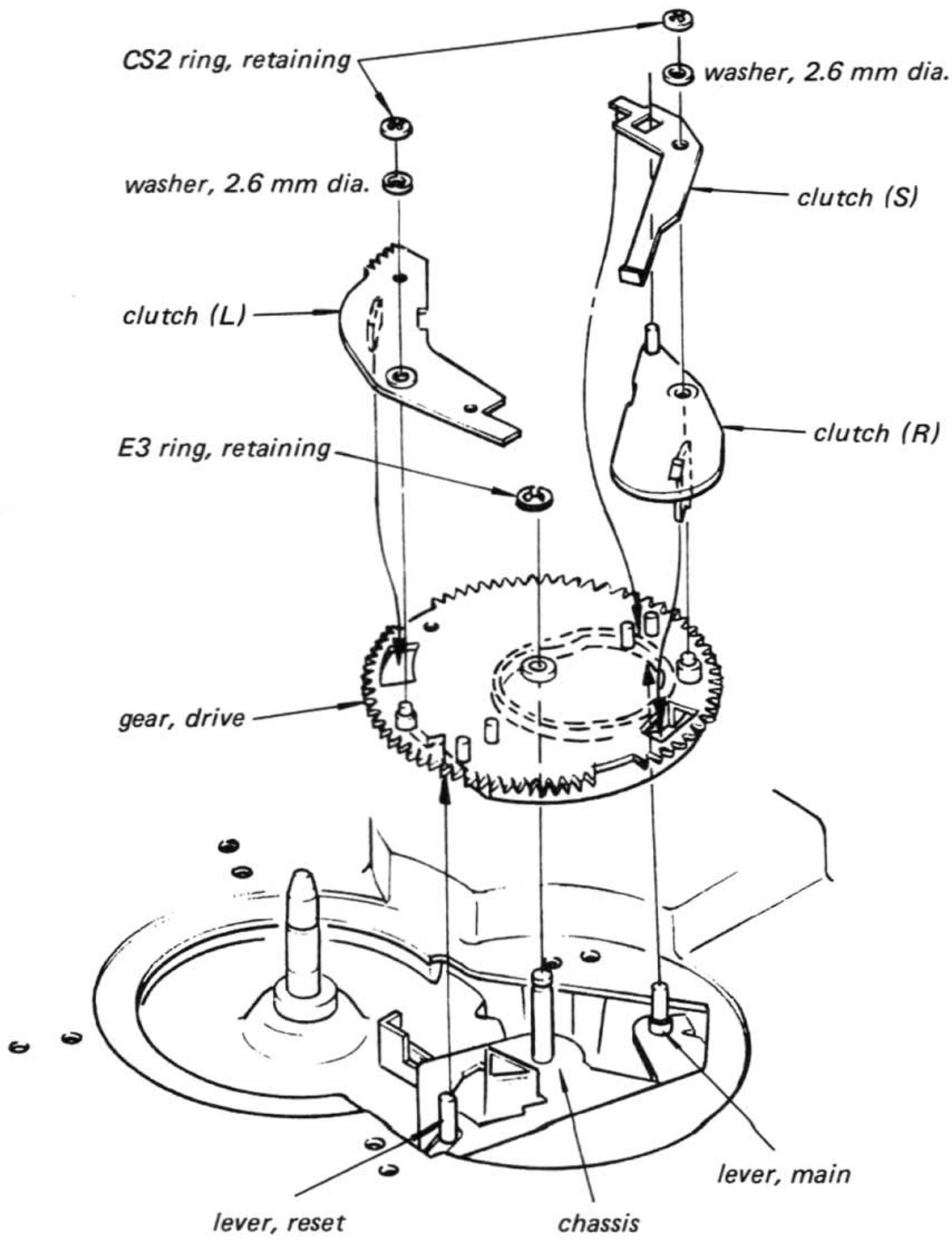

Tonearm Assembly (1)

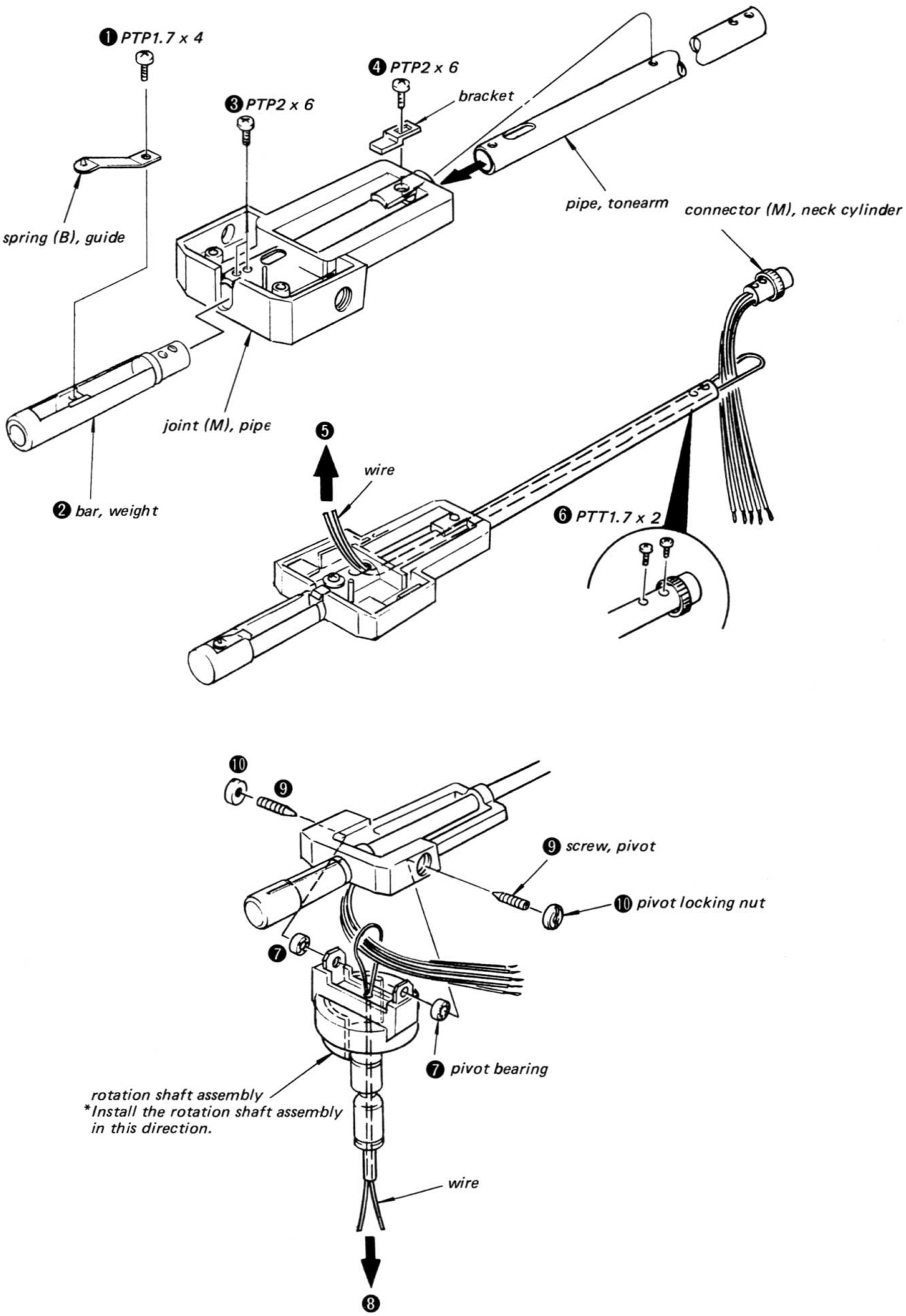

Tonearm Assembly (2)

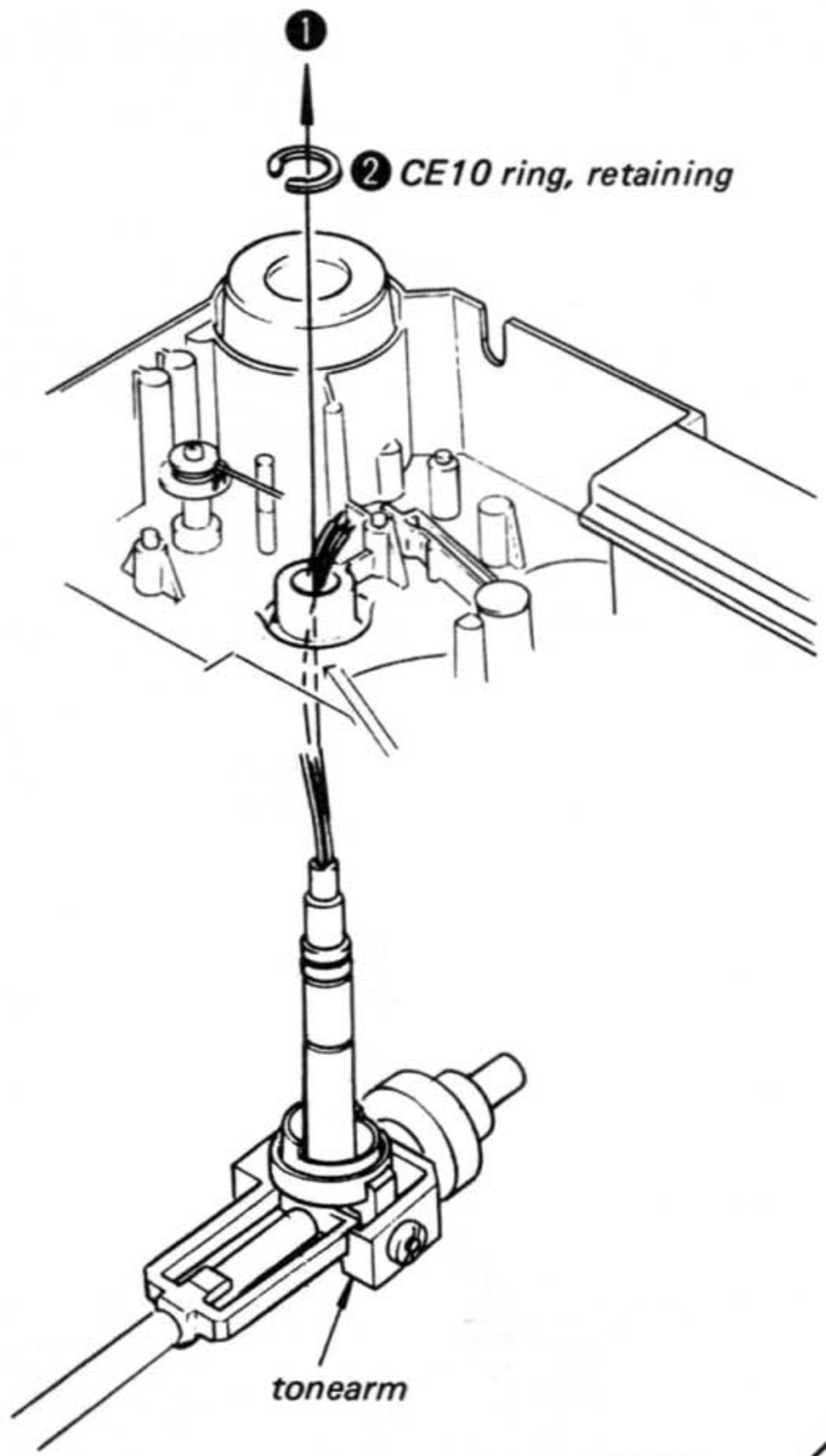

Arm Lever Ass'y Installation

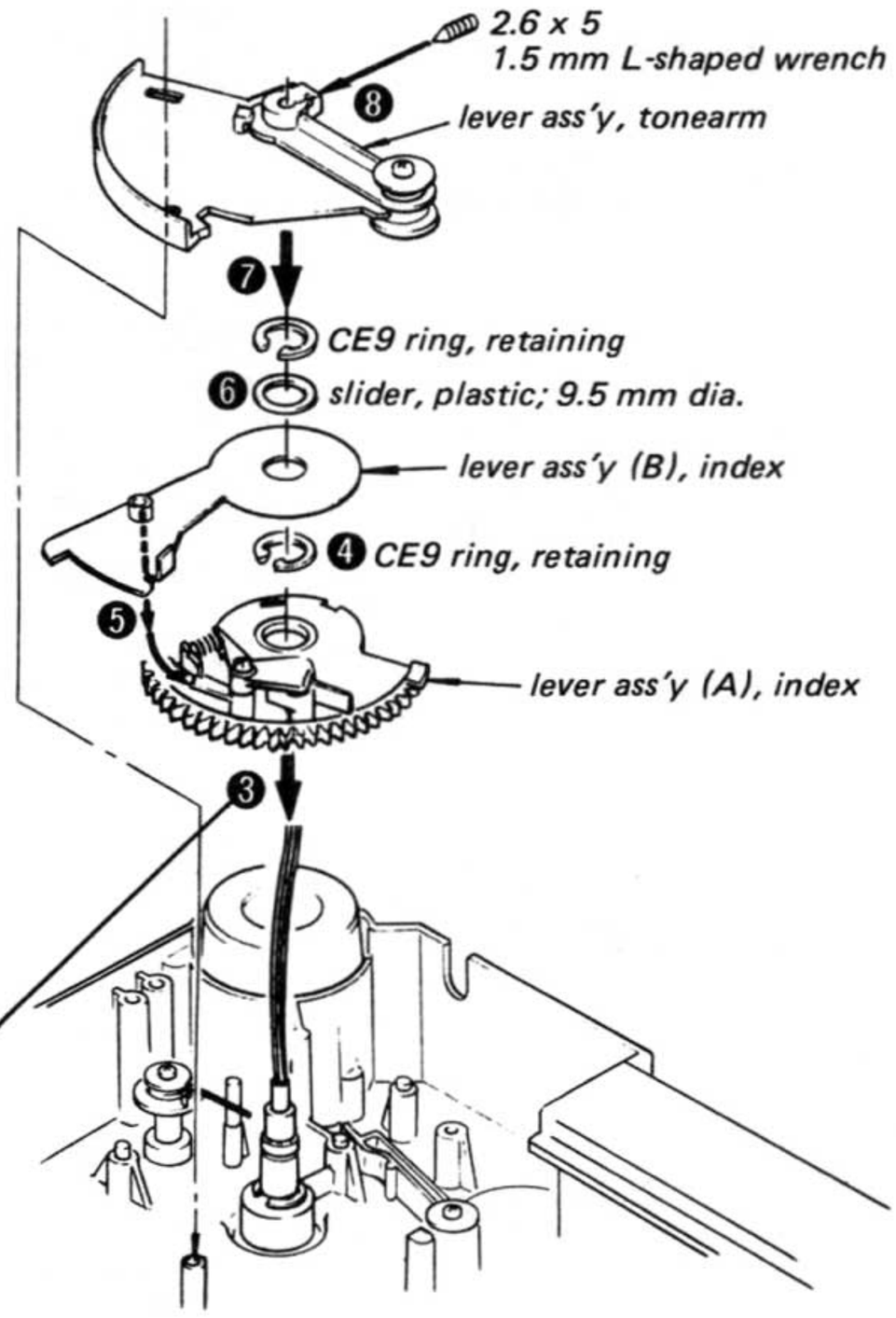

❸ Position of parts of index lever (A) assembly

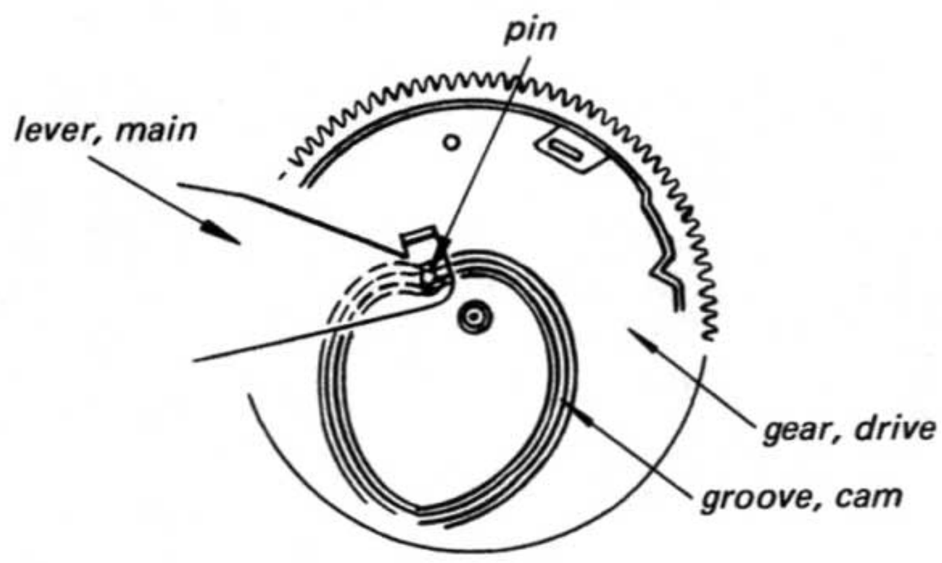

Rotate the drive gear so that pin of main lever is positioned as illustrated above.

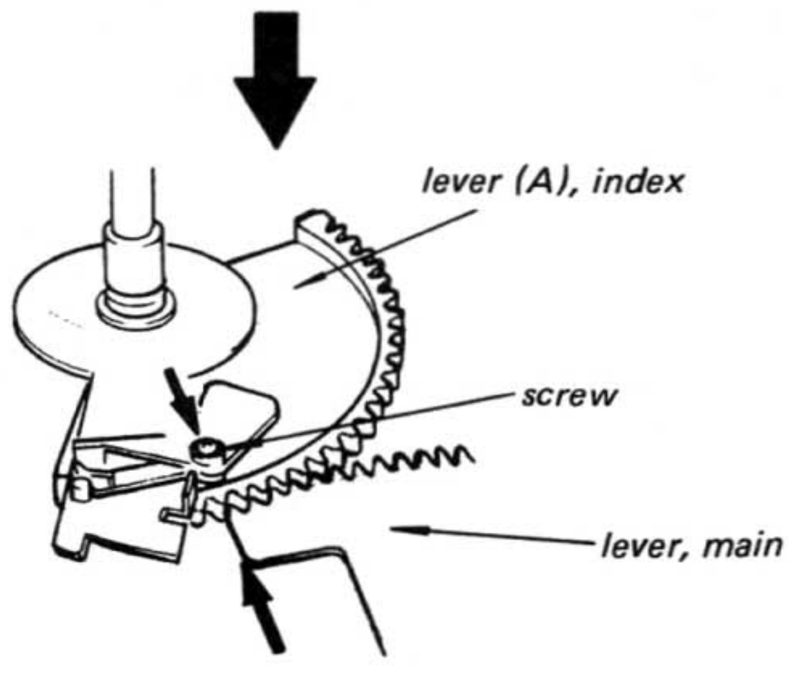

Put the center of the screw of the index lever (A) on the edge of the gear of main lever.

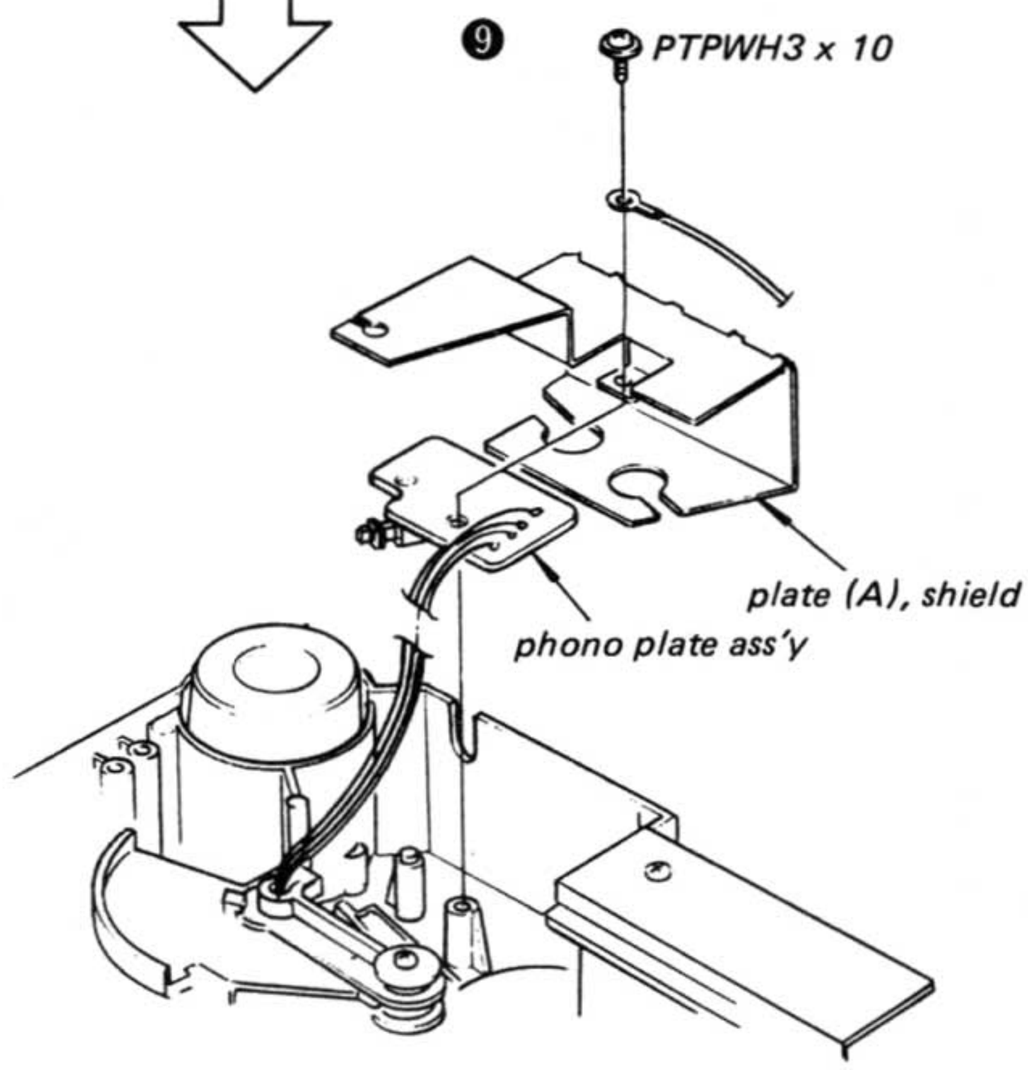

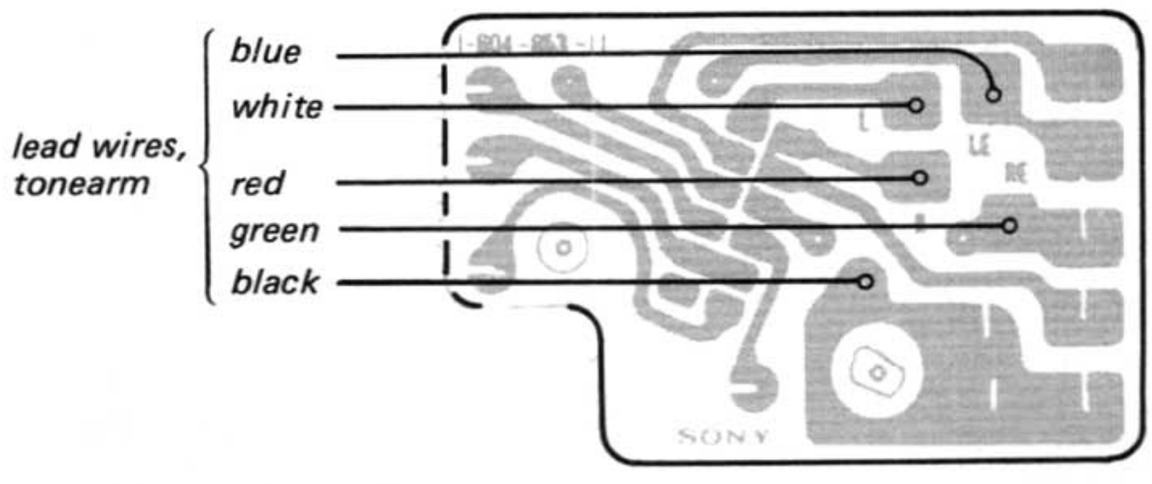

SECTION 3
ADJUSTMENTS

Shell's Horizontal Balance Adjustment

Loosen the screw on the neck cylinder so that the clearance Ⓐ is less than 0.5 mm.

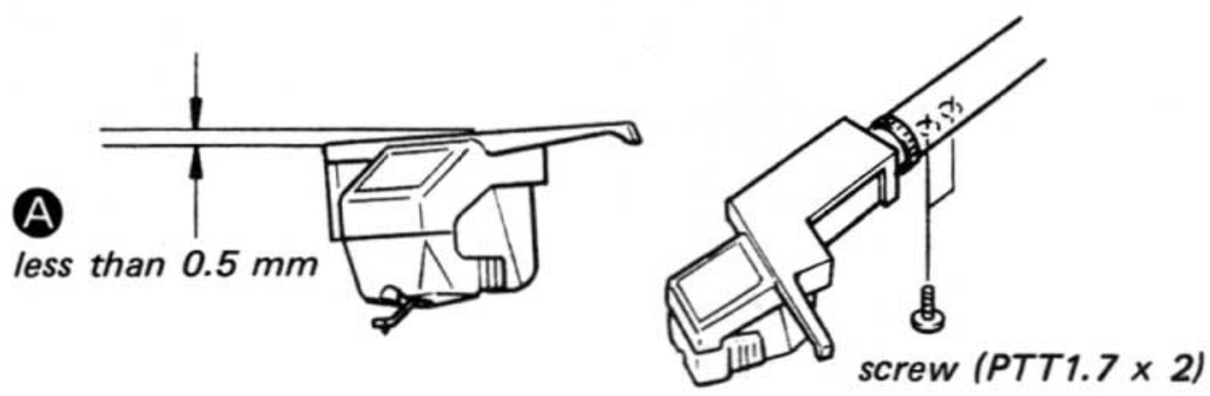

Stylus Drop-point Adjustment

1. Remove the rubber cap.
2. Make sure that the stylus drops on the specified point of the test record.
   test record: YFSC-16

Record size	Count of drop-point
30 (12″)	2 to 19

3. If necessary, insert a screwdriver into the hole and adjust the drop-point by turning the adjustment screw.
   To change the drop-point inward:
   Turn the adjustment screw slightly clockwise. (The count of the drop-point will be larger.)
   To change the drop-point outward:
   Turn the adjustment screw slightly counter-clockwise. (The count of the drop-point will be smaller.)

   Note 1: The adjustment screw can be turned with a hexagonally shaped pencil.

   Note 2: Once it is properly adjusted with a 30 cm (12″) record, the drop-point will be correct for 17 cm (7″) records.

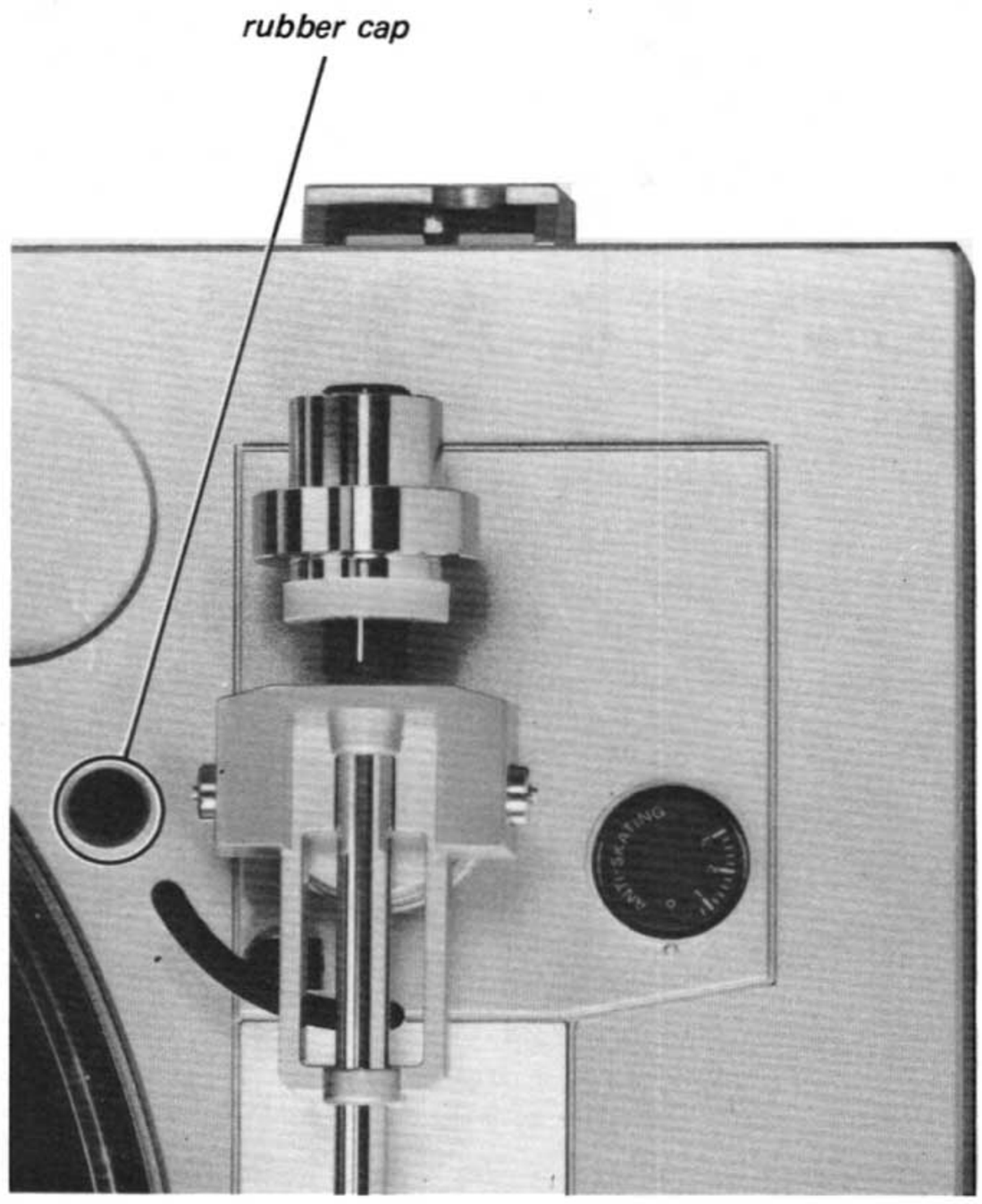

Stylus Height Adjustment

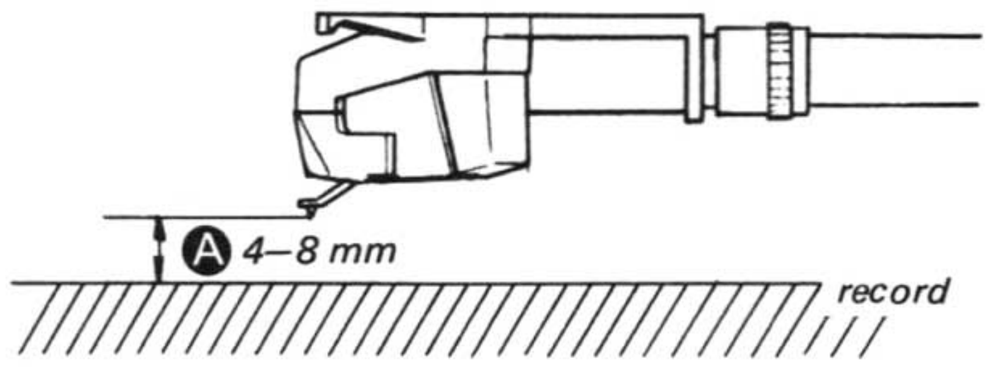

- **During auto play**

1. Put the record on the turntable and lower the tonearm by pressing Up/Down button [▽ ▽] and then press START/STOP button for record play.
2. When the tonearm reaches the end of the record, turn the POWER switch off before it returns to the arm rest and stop the rotation of the turntable by hand.
3. Make sure that the clearance Ⓐ is 4 – 8 mm ($^5/_{32}$ – $^5/_{16}$"). If necessary, loosen the set screw and adjust the lifter height.

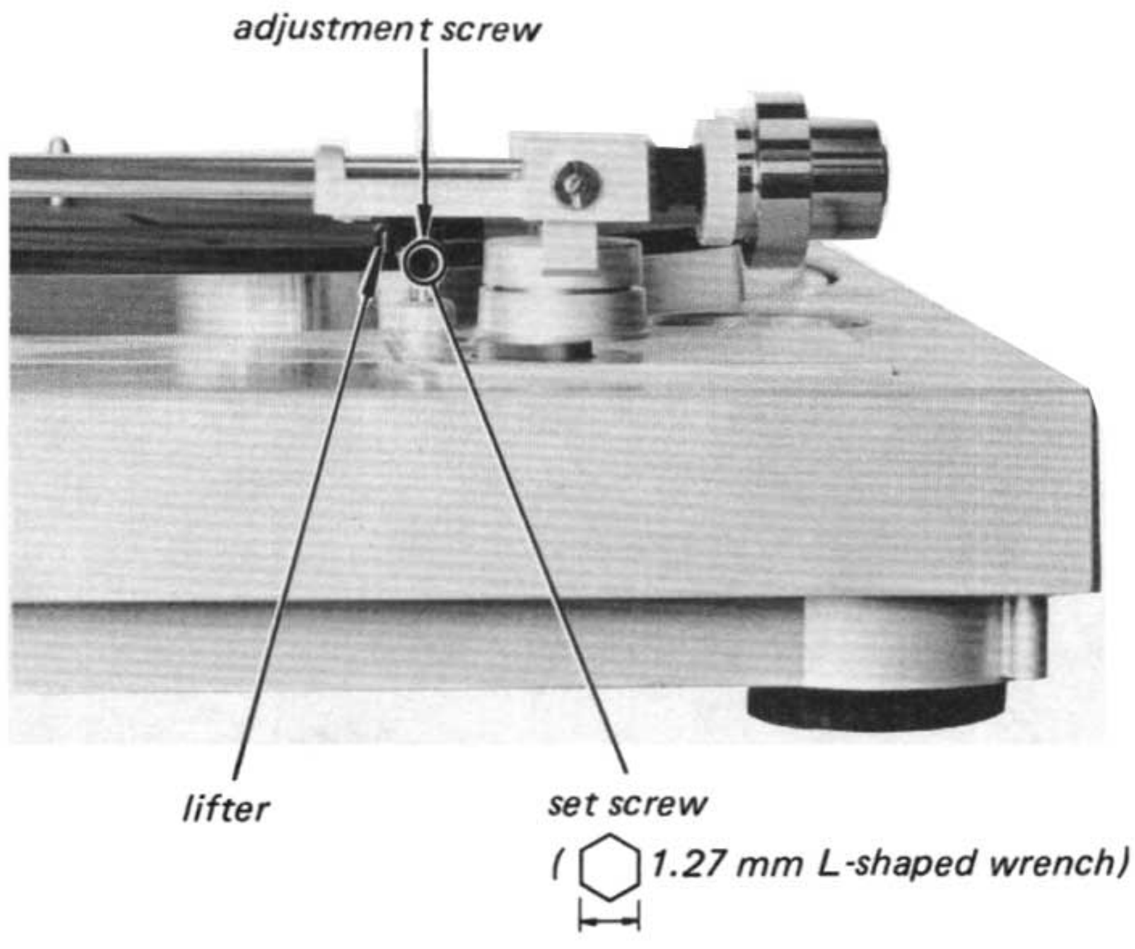

- **During manual play**

1. Lift the tonearm by pressing Up/Down button [▽ ▽] and then press START/STOP button for record play.
2. When the tonearm reaches the lead-in groove, turn the POWER switch off.
3. Make sure that the clearance Ⓐ is 4 – 8 mm ($^5/_{32}$ – $^5/_{16}$"). If necessary, turn the adjustment screw on the seesaw lever (B).

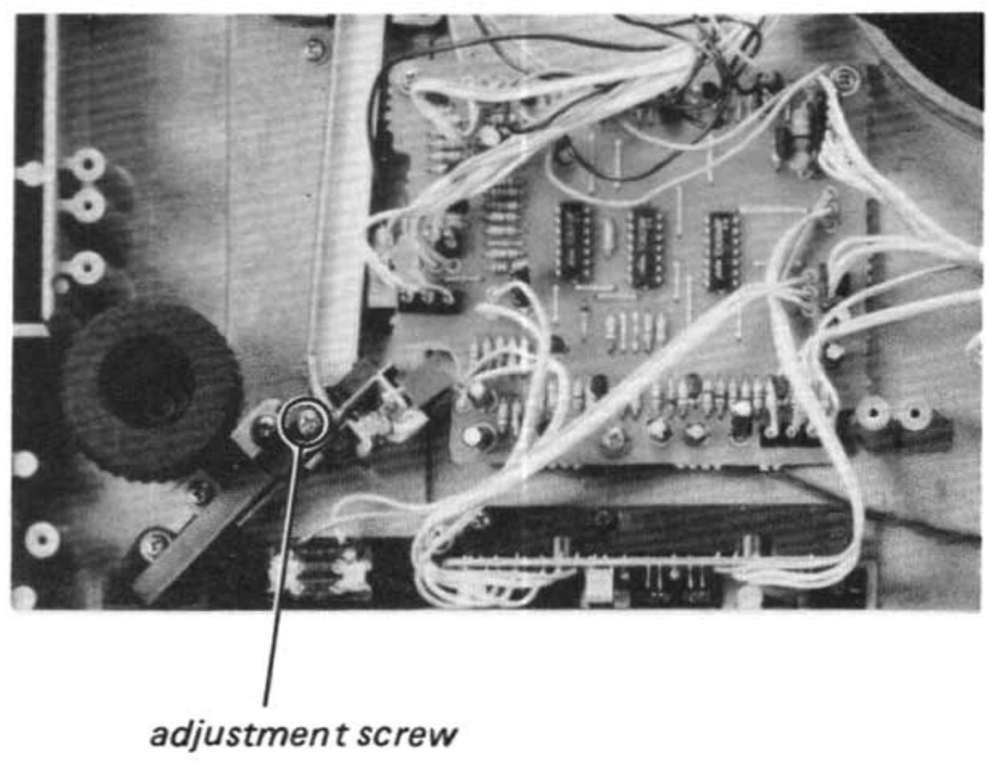

Brake Lever Position Adjustment (unplug the power cord.)

1. Reset the reset lever, so that the pin of the reset lever is in the reset hole of the drive gear.
2. By turning the adjustment screw, adjust the brake lever position so that:
   1) The rubber of the size lever slightly touches side Ⓐ of the chassis.
   2) Side Ⓑ of the brake lever slightly touches the pin of the size lever.

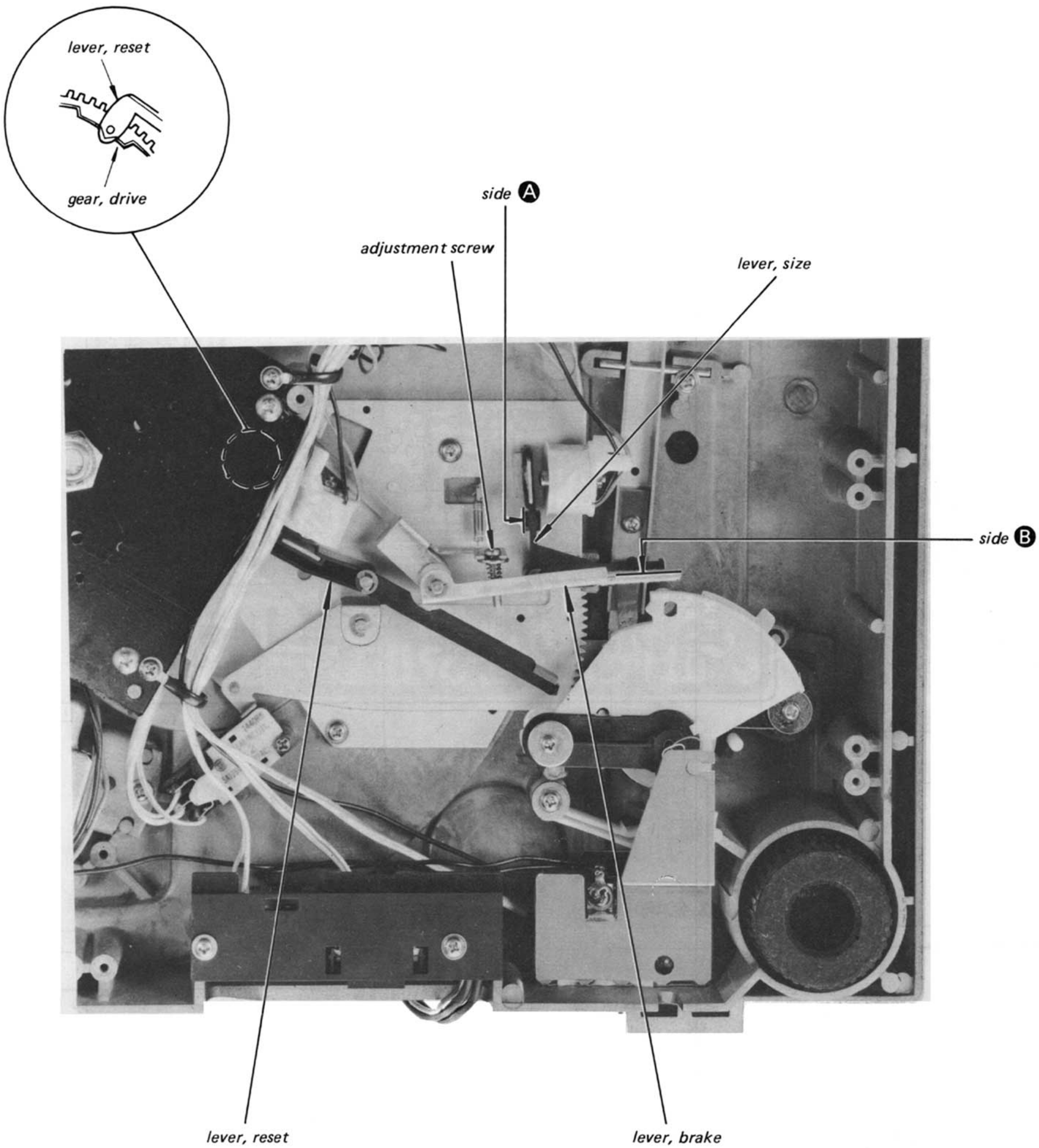

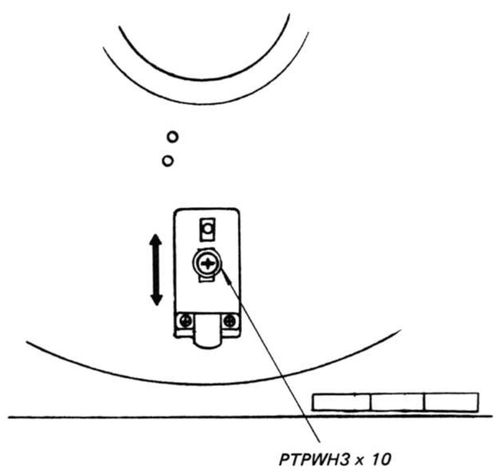

Speed Detecting Head Output Level Adjustment

Setting:

POWER switch: ON

1. Adjust the position of the head by moving it back and forth after loosening the screw (PTPWH 3 x 10) so that the VTVM reading is more than 25 mV ac at 33⅓ rpm.

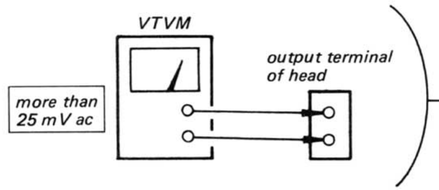

2. Make sure that the head does not touch the turntable and tighten the screws securely.

Note: The clearance between the magnet coated rim and the speed-detecting head should be more than 0.3 mm.

Speed Adjustment

Setting:

POWER switch: ON

1. Set the SPEED to 45 rpm.
2. Adjust RV102 for specified waveform on the oscilloscope as shown below.

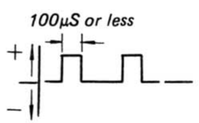

Note: The waveform may appear to negative side.

3. Set the SPEED to 33 rpm.
4. Adjust RV101 for specified waveform on the oscilloscope as shown below.

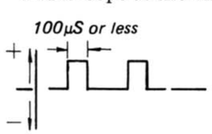

Note: The waveform may appear to negative side.

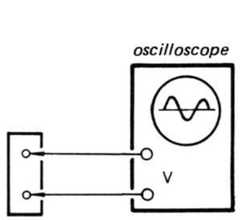

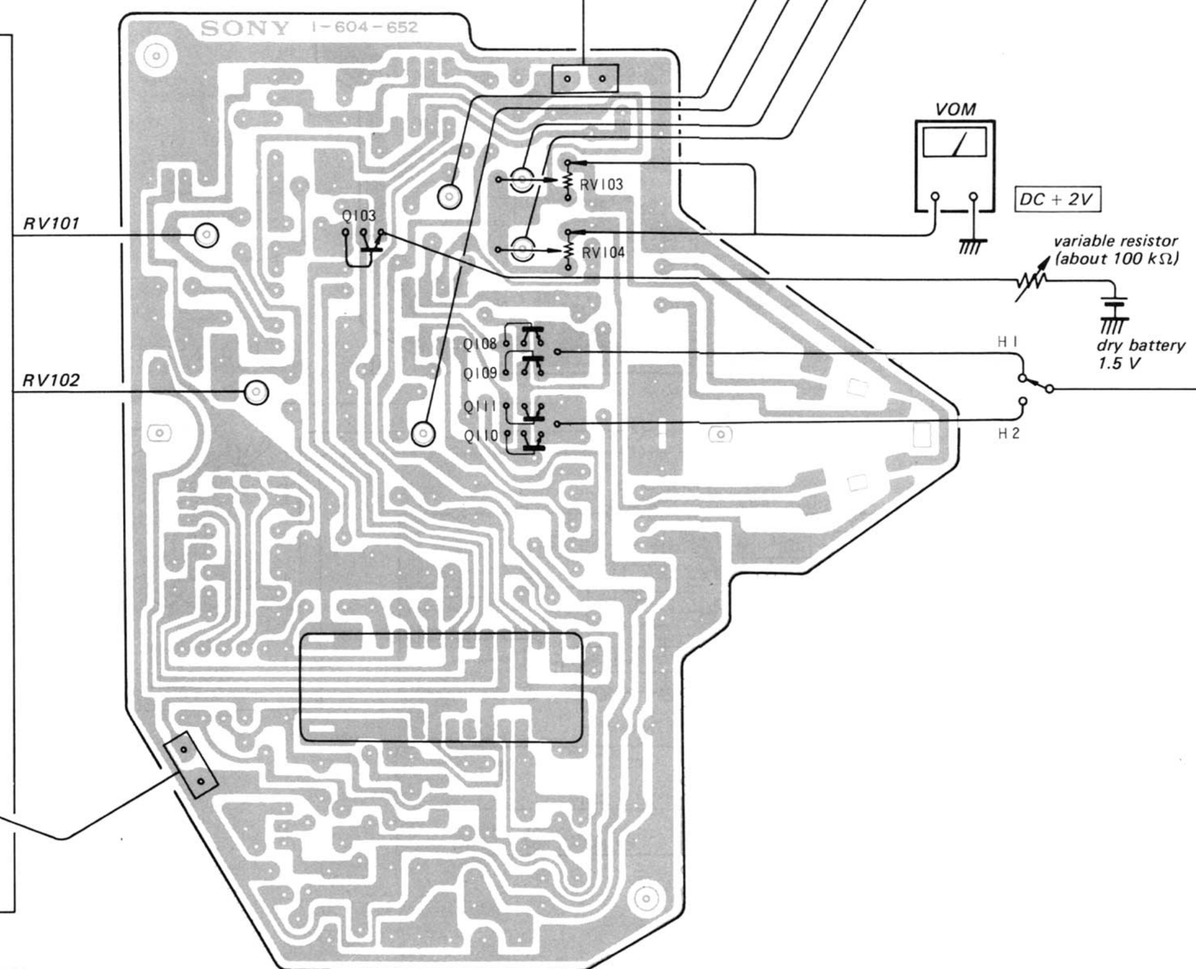

Gain/Offset Adjustment

Remove the turntable, turn POWER switch on.

1. Connect a dry battery (1.5 V) to the emitter of Q103 via a variable resistor (about 100 kΩ). Adjust the variable resistor so that terminal voltage at RV103, 104 is 2 V.

Gain adjustment:

2. Connect an oscilloscope to H1 and adjust RV103 for 5 Vp-p reading on the oscilloscope.
3. Connect an oscilloscope to H2 and adjust RV104 for 5 Vp-p reading on the oscilloscope.

Offset adjustment:

4. Connect VTVM or an oscilloscope to H1 and adjust RV105 for 0 V dc VTVM reading or for the waveform on the oscilloscope as shown below.
5. Connect VTVM or an oscilloscope to H2 and adjust RV106 for 0 V dc VTVM reading or for the waveform on the oscilloscope as shown below.

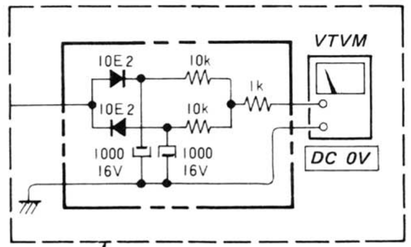

or:

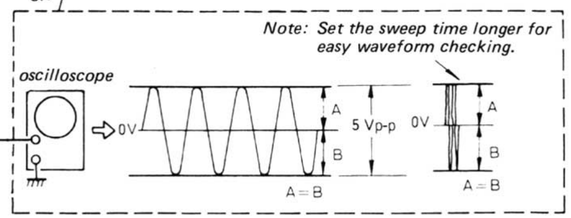

4-1. MOUNTING DIAGRAM

See page 19 for the semiconductor lead layouts.

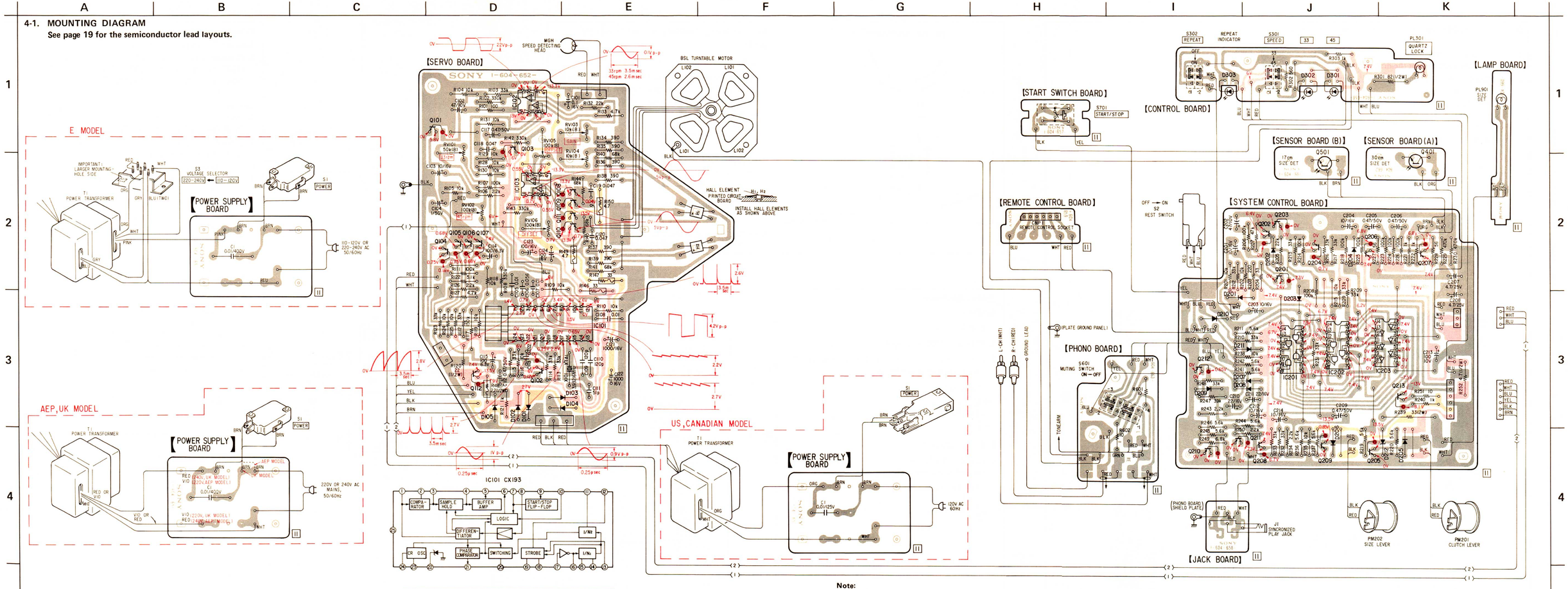

| | | |

4-2. SCHEMATIC DIAGRAM

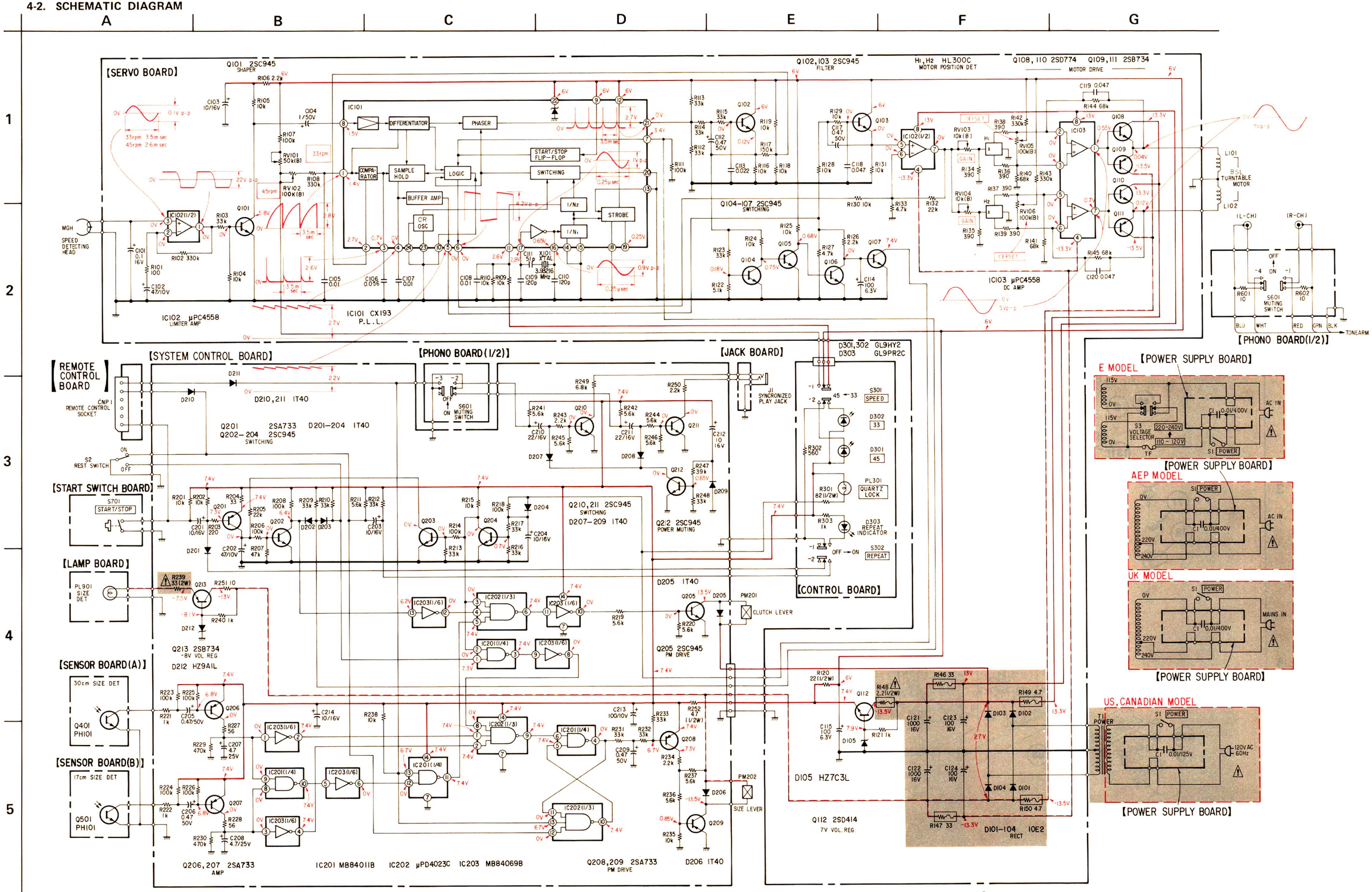

Semiconductor Lead Layouts

2SA844

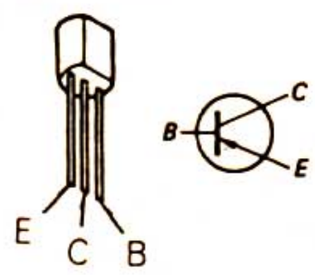

2SD414

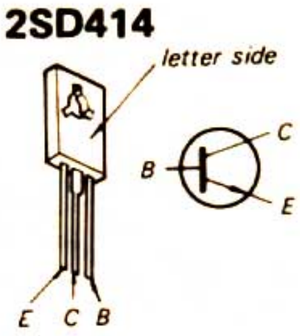

MB84011B
MB84069B

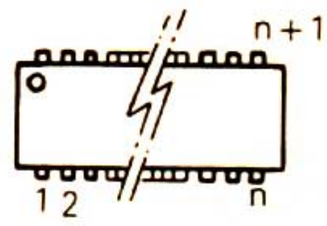

(Top view)

10E2
1T40
1S1555
HZ7C3L
HZ9A1L

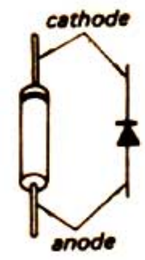

2SB734

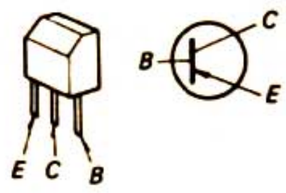

2SD774

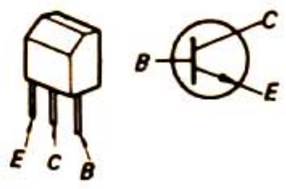

μPC4558C

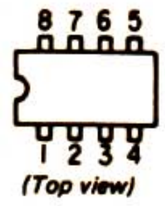

(Top view)

GL9HY2
GL9PR20

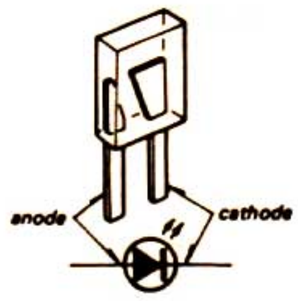

2SC945

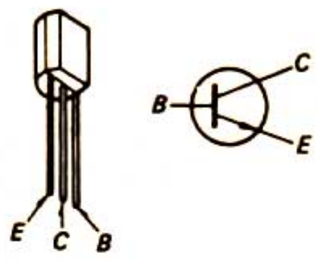

PH101

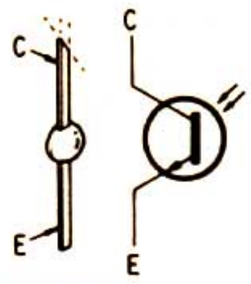

μPD4011C
μPD4023C
μPD4069C

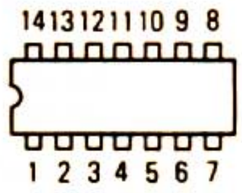

(Top view)

HL-300C

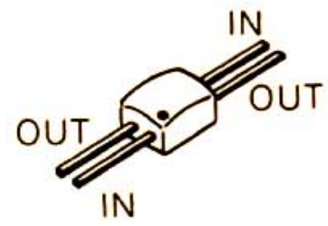

2SC1364

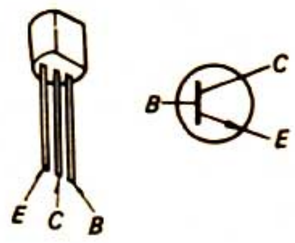

CX193

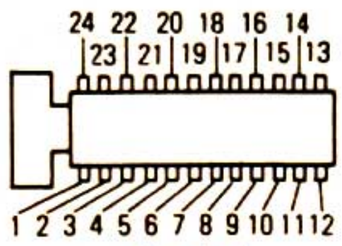

(Top view)

Note:

- All capacitors are in μF unless otherwise noted. pF : μμF 50WV or less are not indicated except for electrolytics and tantalums.
- ⊣▭⊢ : fusible resistor.
- ——— : B+ bus.
- — — — : B- bus.
- Voltages are dc with respect to ground unless otherwise noted.
- Readings are taken with a VOM (20 kΩ/V).
- Voltage variations may be noted due to normal production tolerances.
- Switch

Ref. No.	Switch	Position
S1	POWER	OFF
S2	rest	rest
S301	SPEED	33 rpm
S302	REPEAT	OFF
S601	muting	ON
S701	START/STOP	OFF

Note: The components identified by shading and mark ⚠ are critical for safety. Replace only with part number specified.

Note: Les composants identifiés par une trame et une marque ⚠ sont critiques pour la sécurité. Ne les remplacer que par une pièce portant le numéro spécifié.

SECTION 5
EXPLODED VIEWS AND PARTS LIST

5-2.

A
B
C
1
2
3
4
5
■A
(including ■A) 141
108
107
107
26
138
140
31
116
84
107
137
54
26
28
103
28
59
97
106
2
123
101
113
64
139
59
28
2
28
33
149
39
55
96
81
46
152
75
3 US, Canadian model
4 AEP, UK, E model
49
8
100
95
28
53
102
121
20
131
107
94
99
28
1
T1
28
14
80
S1
28
30
77
28
28
79
78
85
62
63
60
148
65
28
10
12
S3
91
8
28
113
49
28
123
88
84
13
71

5-3.

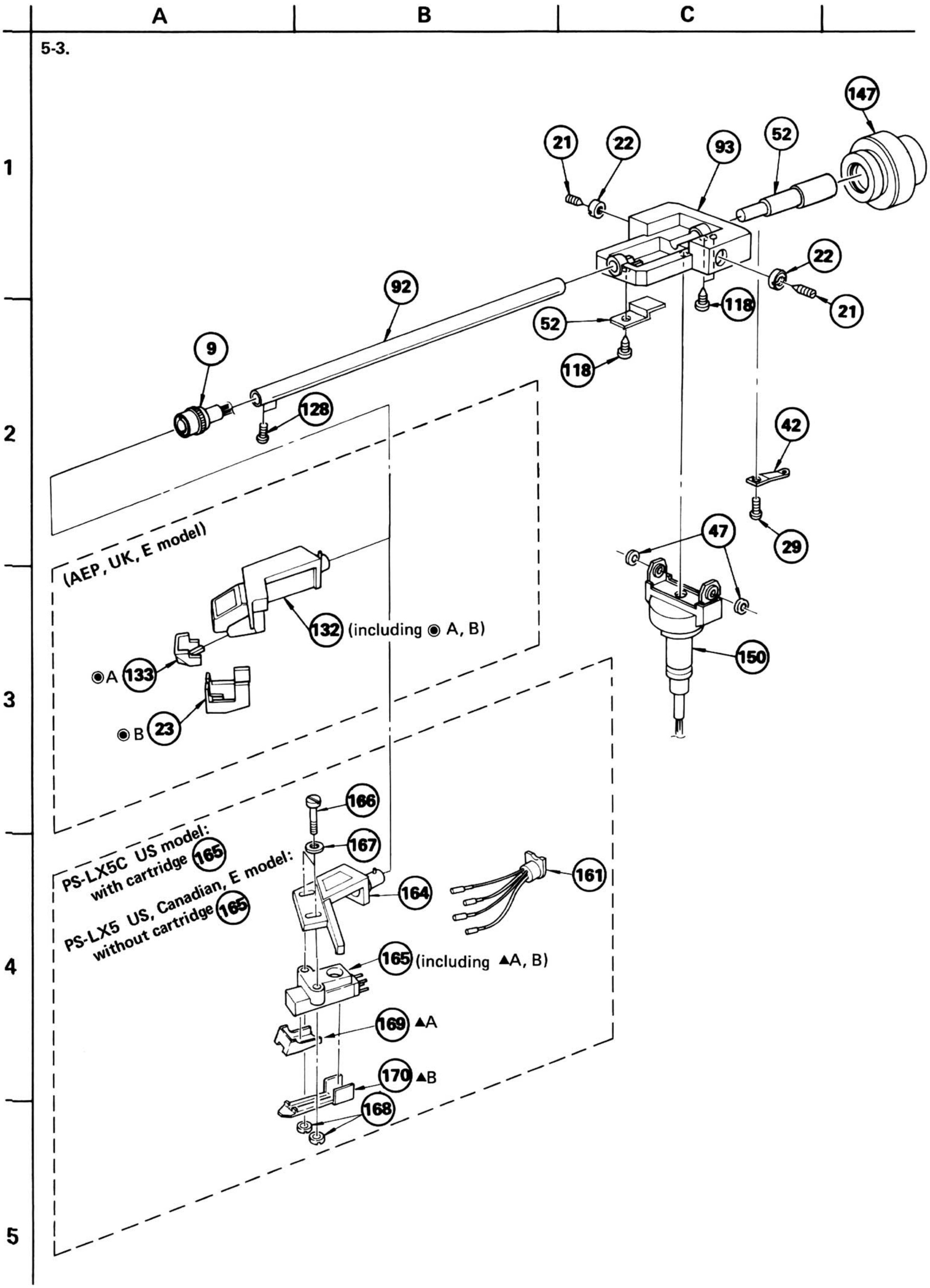
147
21
22
93
52
22
92
118
21
52
9
118
128
42
47
29
(AEP, UK, E model)
132 (including ◉ A, B)
150
◉A 133
◉B 23
166
PS-LX5C US model:
with cartridge 165
167
PS-LX5 US, Canadian, E model:
without cartridge 165
164
161
165 (including ▲A, B)
169 ▲A
170 ▲B
168

GENERAL SECTION

No.	Part No.	Description
1 ⚠	1-446-967-00	(E).....TRANSFORMER, POWER (T1)
1 ⚠	1-446-966-00	(AEP,UK).....TRANSFORMER, POWER (T1)
1 ⚠	1-446-965-00	(US,Canadian)...TRANSFORMER, POWER (T1)
2	1-454-196-31	SOLENOID
3 ⚠	1-516-657-00	SWITCH,MICRO
4 ⚠	1-516-889-00	SWITCH,MICRO
5	1-543-093-00	HEAD
6	1-551-294-00	CORD
7 ⚠	1-551-628-00	(US,Canadian)...CORD, POWER
7 ⚠	1-551-962-00	(AEP,UK).....CORD, POWER
7 ⚠	1-551-967-00	(E).....CORD, POWER
8	1-553-444-00	SWITCH, PUSH (1 KEY)
9	1-561-551-00	CONNECTOR, NECK CYLINDER (M)
10 ♠	;1-604-651-00	PC BOARD, POWER
11 ♠	;A-4619-165-A	MOUNTED PCB, SERVO
12 ♠	;A-4644-075-A	MOUNTED PCB, SYSTEM CONTROL
13 ♠	;1-604-656-00	PC BOARD, CONTROL
14 ♠	;1-604-657-00	PC BOARD, START SW
15 ♠	;1-604-658-00	PC BOARD, JACK
16 ♠	;1-604-659-00	PC BOARD, REMOTE CONTROL
17 ♠	;1-604-660-00	PC BOARD, LAMP
18 ♠	;1-604-661-00	PC BOARD, SENSOR (A)
19 ♠	;1-604-662-00	PC BOARD, SENSOR (B)
20 ♠	;1-604-663-00	PC BOARD, PHONO
21	2-203-518-00	SCREW
22	4-874-272-00	NUT (L), LOOK
23	2-330-163-00	(AEP,UK,E)...COVER, STYLUS
24	3-548-124-00	SPRING, TENSION
25	.....	
26	3-701-441-21	WASHER
27	3-703-136-00	SCREW, TAPPING
28	3-703-137-00	SCREW, TAPPING
29	3-703-454-00	SCREW, TAPPING
30	4-301-647-00	WASHER, SPECIAL
31	4-876-346-00	SPRING, TENSION (RESET)
32	4-314-529-00	HEAD, WASHER, TAPPING SCREW
33	4-812-554-00	WASHER
34	4-876-304-00	(LX5-US,Canadian,AEP,UK,E) ...CUSHION,DUSTCOVER
35	4-852-008-00	RETAINER (B), THRUST
36	4-844-041-11	WASHER, (N)
37	4-852-704-41	(LX5-US,Canadian,AEP,UK,E)...HINGE
38	4-852-007-00	RETAINER (A), THRUST
39 ♠	;4-852-033-00	RETAINER, CASE, PUSH ROD
40	4-852-061-00	GEAR, CENTER
41	4-852-841-00	TUBE
42	4-853-043-00	SPRING (B), GUIDE
43	4-857-642-00	HOLDER, PC BOARD
44	4-857-661-11	EMBLEM, SONY
45 ♠	;4-858-266-00	BRACKET, HEAD

GENERAL SECTION

No.	Part No.	Description
46 ♠	;4-861-940-00	SHAFT, LIFTER LEVER
47	4-863-604-00	BEARING, PIVOT
48	4-874-246-00	RETAINER, PLATE, UP AND DOWN
49	4-870-757-00	CONNECTOR
50	4-874-205-01	PLATE (A), BOTTOM
51 ♠	;4-874-207-00	FRAME
52	4-874-244-00	BAR, WEIGHT
53 ♠	;4-874-210-00	HOLDER, TRANSFORMER
54	4-874-217-00	ROD, PUSH
55 ♠	;4-874-218-00	CASE, PUSH ROD
56	4-874-223-02	LEVER (A), ARM
57	4-874-231-00	CAM, ECCENTRIC
58	4-874-232-00	CLUTCH (R)
59	4-874-234-00	CORE
60 ♠	;4-874-235-00	LEVER, MUTING
61 ♠	;4-874-236-00	HOLDER, SENSOR
62	4-874-237-00	DAMPER, TRANSFORMER
63	4-874-238-00	KNOB, POWER
64 ♠	;4-874-239-00	HOLDER, LOCK MECHANISM
65	4-874-241-01	ESCUTCHEON, POWER
66	4-874-247-00	KNOB, IFC
67	4-874-250-00	SPRING
68	4-874-252-00	CAM, IFC
69	4-874-254-00	CLUTCH (S)
70 ♠	;4-874-255-00	BRACKET, CHASSIS
71	4-874-257-11	KNOB (A)
72	4-874-258-01	PLATE, INDICATION
73	4-874-260-01	CAP, BLIND
74	4-874-261-01	PANEL (D), INDICATION
75 ♠	;4-874-263-00	PLATE (A), SHIELD
76	4-874-265-11	FILTER
77	4-874-267-01	KNOB, LIFTER
78	4-874-269-11	ESCUTCHEON, LIFTER
79	;4-874-273-00	PLATE, GROUND, PANEL
80	4-874-274-00	HOLDER, SWITCH, MICRO
81 ♠	;4-874-276-00	PLATE (B), SHIELD
82	4-874-277-03	LEVER (B), ARM
83	4-874-279-00	CLUTCH (L)
84	4-874-280-00	LEVER (B), SEESAW
85	4-874-281-01	ESCUTCHEON, START
86	4-874-285-01	BOARD, TERMINAL,REMOTE CONTROL
87 ♠	;4-874-286-00	BOARD (B), BOTTOM
88	4-874-288-01	ESCUTCHEON
89	4-874-290-01	PANEL
90	4-874-292-00	GEAR (F), DRIVE

NOTE:
- Items with no part number and no description are not stocked because they are seldom required for routine service.
- Items marked " ♠ " are not stocked since they are seldom required for routine service. Some delay should be anticipated when ordering these items.
- Due to standardization, parts with part numbers (Δ-ΔΔΔ-ΔΔΔ-XX or Δ-ΔΔΔΔ-ΔΔΔ-X) may be different from those used in the set.

CAPACITORS:
- All capacitors are in μF. Common capacitors are omitted. Refer to the following lists for their part numbers. MF:μF, PF:μμF.

RESISTORS
- All resistors are in ohms. Common 1/4W, 1/8W and 1/16W carbon resistors are omitted. Refer to the following lists for their part numbers.
- F : nonflammable

COILS
- MMH : mH, UH : μH

The components identified by shading and mark ⚠ are critical for safety. Replace only with part number specified.

Les composants identifiés par une trame et une marque ⚠ sont critiques pour la sécurité. Ne les remplacer que par une pièce portant le numéro spécifié.

No.	Part No.	Description
91	4-876-327-00	(US,Canadian)...LABEL, MODEL NUMBER
91	4-876-303-00	(AEP).....LABEL, MODEL NUMBER
91	4-876-329-00	(UK).....LABEL, MODEL NUMBER
91	4-876-331-00	(E).....LABEL, MODEL NUMBER
92	4-874-243-00	PIPE, ARM
93	4-874-291-00	JOINT (D), PIPE
94 ♠	;4-876-314-00	LEVER (C), SEESAW
95 ♠	;4-876-315-00	LEVER (D), SEESAW
96	4-876-316-00	ROD, DAMPER
97 ♠	;4-876-317-00	GUIDE, LIFTER
98	4-876-324-21	POLY-SLIDER (DIA.9.5)
99	4-876-338-00	SPRING, TENSION (UP)
100	4-876-339-00	SPRING, TENSION (DOWN)
101	4-876-340-00	SPRING, COMPRESSION
102	4-876-375-00	SPRING, COMPRESSION
103	7-621-259-45	SCREW +P 2.6X6
104	3-701-509-00	SET SCREW, DOUBLECUP 3X8
105	7-621-738-08	SET-SCT,HEX. 2.6X4,FLAT POINT
106	7-622-207-05	N 2.6, TYPE 2
107	7-624-106-04	STOP RING 3.0, TYPE -E
108	4-874-275-00	PAD, BRAKE
109	7-624-133-44	STOP RING 9, TYPE-CE
110	7-624-133-54	STOP RING 10, TYPE-CE
111	7-624-190-81	STOP RING 2, TYPE-CS
112	7-671-114-01	BALL 4, STEEL
113	7-682-146-01	SCREW +P 3X5
114	7-682-546-04	SCREW +B 3X5
115	.....	
116	7-682-553-04	SCREW +B 3X20
117	7-685-102-21	SCREW +P 2X4 TYPE2 SLIT
118	7-685-104-64	SCREW +P 2X6 TYPE2 SLIT
119	.....	
120	7-685-145-21	SCREW +P 3X6 TYPE2 SLIT
121	7-685-150-21	SCREW +P 3X16 TYPE2 SLIT
122	7-685-152-21	SCREW +P 3X25 TYPE2 SLIT
123	7-685-646-21	SCREW +BVTP 3X8 TYPE2 SLIT
124	.....	
125	.....	
126	7-685-651-21	SCREW +BVTP 3X20 TYPE1
127	7-685-661-21	SCREW +BVTP 4X12 TYPE2 SLIT
128	7-685-772-04	SCREW +PTT 1.7X2 TYPE1
129	7-685-872-01	SCREW +BVTT 3X8 (S)
130	7-623-105-15	W 2, MIDDLE
131	7-688-004-11	W 4, MIDDLE
132	A-4505-068-A	(AEP,UK,E)..CARTRIDGE COMPLETE ASSY,XL-200
133	A-4587-061-A	(AEP,UK,E)..STYLUS ASSY, ND-200G
134	A-4608-175-A	ROTOR ASSY
135	A-4608-176-A	STATOR ASSY

No.	Part No.	Description
136	X-4874-218-0	TURNTABLE ASSY
137 ♠	;X-4874-202-0	LEVER ASSY, MAIN
138	X-4874-203-0	LEVER ASSY, CLUTCH
139 ♠	;X-4874-204-0	LEVER ASSY, SIZE
140 ♠	;X-4874-205-0	LEVER ASSY, RESET
141 ♠	;X-4874-206-0	LEVER ASSY, BRAKE
142	X-4874-208-0	LEVER (A) ASSY, INDEX
143 ♠	;X-4874-209-0	LEVER (B) ASSY, INDEX
144	X-4874-211-0	PLATE ASSY, UP AND DOWN
145	X-4874-212-1	REST ASSY, ARM
146	X-4874-213-0	HOUSE ASSY, LIGHT
147	X-4874-214-0	WEIGHT ASSY, MAIN
148	X-4874-215-1	KNOB ASSY, START
149 ♠	;X-4874-217-0	CHASSIS ASSY
150	X-4874-219-0	JOINT ASSY, CENTER
151	X-4874-224-0	INSULATOR ASSY
152	X-4874-225-0	CASE ASSY, DAMPER
153	0-056-028-00	WASHER, 14
154	X-4874-220-0	(LX5-US,Canadian,AEP,UK,E) ...COVER ASSY, DUST

NOTE:

- Items with no part number and no description are not stocked because they are seldom required for routine service.

  Items marked " ♠ " are not stocked since they are seldom required for routine service. Some delay should be anticipated when ordering these items.

  Due to standardization, parts with part numbers (Δ-ΔΔΔ-ΔΔΔ-XX or Δ-ΔΔΔΔ-ΔΔΔ-X) may be different from those used in the set.

CAPACITORS:

- All capacitors are in μF. Common capacitors are omitted. Refer to the following lists for their part numbers. MF:μF, PF:μμF.

RESISTORS

- All resistors are in ohms. Common 1/4W, 1/8W and 1/16W carbon resistors are omitted. Refer to the following lists for their part numbers.
- F : nonflammable

COILS

- MMH : mH, UH : μH

ACCESSORY & PACKING MATERIAL

No.	Part No.	Description
161	1-555-463-00	(US,Canadian,E).....CONNECTOR,WITH LEAD
	3-701-613-00	BAG, POLYETHYLENE
	3-701-616-00	BAG, POLYETHYLENE
	3-701-630-00	BAG, POLYETHYLENE
	3-701-806-00	(E).....ADAPTOR, 45
	3-783-559-11	(AEP,UK,E).....MANUAL, INSTRUCTION
	3-783-559-21	(US,Canadian).....MANUAL, INSTRUCTION
	3-794-123-11	LABEL, CAUTION
	3-795-153-51	(E).....INSTRUCTION, HEAD SHELL
	4-862-043-00	CUSHION, ARM
	4-862-680-00	PROTECTOR
	4-870-529-00	**(E) . . . . . .SHELL CASE**
162	4-874-262-00	GUIDE, RECORD
163	4-874-202-01	(Canadian,AEP,UK,E)...SHEET, TURNTABLE
163	4-874-202-11	(US).....SHEET, TURNTABLE
	4-876-310-00	CUSHION, TURNTABLE
	4-876-320-00	SPACER, CLUTCH
	4-876-348-00	(AEP,UK,E)..GUIDE,STYLUS PRESSURE SETTING
	4-876-350-00	HOLDER, TABLE
	4-876-352-00	SHEET, PROTECTION
	4-876-355-00	INDIVIDUAL CARTON
	4-876-356-00	CUSHION, LEFT
	4-876-357-00	CUSHION, RIGHT
164	X-4869-912-3	(US,Canadian).....SHELL ASSY, HEAD
164	X-4874-226-0	(E).....SHELL ASSY, HEAD
	X-4869-915-0	(LX5-US,Canadian,E)
		.....SCREW ASSY, CARTRIDGE FITTING
	X-4874-227-0	(LX5-US,Canadian,AEP,UK,E).WEIGHT ASSY, SUB
165	1-549-105-00	(LX5C-US)...CARTRIDGE COMPLETE ASSY, VL-5
166	2-056-532-00	(LX5C-US)...SCREW, CARTRIDGE FITTING
167	2-229-507-00	(LX5C-US)...WASHER, CARTRIDGE FITTING
168	4-815-655-01	(LX5C-US)...NUT (A), CARTRIDGE FITTING
169	A-4587-058-A	(LX5C-US)...STYLUS, (ND-5G)
170	2-231-164-00	(LX5C-US)...COVER, STYLUS

ELECTRICAL PARTS

Ref.No.	Part No.	Description
C1	**⚠ 1-161-744-00**	**(AEP,UK,E).....CAP,CERAMIC 0.01MF 400V**
C1	**⚠ 1-161-749-00**	**(US,Canadian)..CAP,CERAMIC 0.01MF 125V**
C121, 122	**⚠ 1-123-324-00**	**1000MF 16V**
C123, 124	**⚠ 1-123-330-00**	**100MF 16V**
CNP1 ♦	;1-508-994-00	PIN, CONNECTOR
D101	⚠ 8-719-200-02	DIODE 10E-2
D102	⚠ 8-719-200-02	DIODE 10E-2
D103	⚠ 8-719-200-02	DIODE 10E-2
D104	⚠ 8-719-200-02	DIODE 10E-2
D105	8-719-910-79	DIODE HZ7C3L
D201	8-719-815-55	DIODE 1S1555
D202	8-719-815-55	DIODE 1S1555
D203	8-719-815-55	DIODE 1S1555
D204	8-719-815-55	DIODE 1S1555
D205	8-719-815-55	DIODE 1S1555
D206	8-719-815-55	DIODE 1S1555
D207	8-719-815-55	DIODE 1S1555
D208	8-719-815-55	DIODE 1S1555
D209	8-719-815-55	DIODE 1S1555
D210	8-719-815-55	DIODE 1S1555
D211	8-719-815-55	DIODE 1S1555
D212	8-719-990-91	DIODE HZ9A1L
D301	8-719-904-92	DIODE GL-9HY2
D302	8-719-904-92	DIODE GL-9HY2
D303	8-719-900-92	DIODE GL-9PR20
IC101	8-751-930-00	IC CX-193
IC102	8-759-145-58	IC UPC4558C
IC103	8-759-145-58	IC UPC4558C
IC201	8-759-240-11	IC UPD4069C
IC202	8-759-140-23	IC UPD4023C
IC203	8-759-140-69	IC UPD4069C
H1	8-719-903-00	DIODE HL-300C
H2	8-719-903-00	DIODE HL-300C
J1	1-507-688-21	JACK (STEREO PLUG)
PL301	1-518-322-21	LAMP, PILOT
PL901	1-518-305-00	LAMP, PILOT
Q101	8-729-663-47	TRANSISTOR 2SC1364
Q102	8-729-663-47	TRANSISTOR 2SC1364
Q103	8-729-663-47	TRANSISTOR 2SC1364
Q104	8-729-663-47	TRANSISTOR 2SC1364
Q105	8-729-663-47	TRANSISTOR 2SC1364
Q106	8-729-663-47	TRANSISTOR 2SC1364
Q107	8-729-663-47	TRANSISTOR 2SC1364
Q108	8-729-177-43	TRANSISTOR 2SD774
Q109	8-729-103-43	TRANSISTOR 2SB734
Q110	8-729-177-43	TRANSISTOR 2SD774

NOTE:
- Items with no part number and no description are not stocked because they are seldom required for routine service.
- Items marked " ♦ " are not stocked since they are seldom required for routine service. Some delay should be anticipated when ordering these items.
- Due to standardization, parts with part numbers (Δ-ΔΔΔ-ΔΔΔ-XX or Δ-ΔΔΔΔ-ΔΔΔ-X) may be different from those used in the set.

CAPACITORS:
- All capacitors are in μF. Common capacitors are omitted. Refer to the following lists for their part numbers. MF:μF, PF:μμF.

RESISTORS
- All resistors are in ohms. Common 1/4W, 1/8W and 1/16W carbon resistors are omitted. Refer to the following lists for their part numbers.
- F : nonflammable

COILS
- MMH : mH, UH : μH

The components identified by shading and mark ⚠ are critical for safety. Replace only with part number specified.

Les composants identifiés par une trame et une marque ⚠ sont critiques pour la sécurité. Ne les remplacer que par une pièce portant le numéro spécifié.

ELECTRICAL PARTS

Ref.No.	Part No.	Description
Q111	8-729-103-43	TRANSISTOR 2SB734
Q112	8-729-141-43	TRANSISTOR 2SD414
Q201	8-729-384-47	TRANSISTOR 2SA844
Q202	8-729-663-47	TRANSISTOR 2SC1364
Q203	8-729-663-47	TRANSISTOR 2SC1364
Q204	8-729-663-47	TRANSISTOR 2SC1364
Q205	8-729-663-47	TRANSISTOR 2SC1364
Q206	8-729-384-47	TRANSISTOR 2SA844
Q207	8-729-384-47	TRANSISTOR 2SA844
Q208	8-729-384-47	TRANSISTOR 2SA844
Q209	8-729-384-47	TRANSISTOR 2SA844
Q210	8-729-663-47	TRANSISTOR 2SC1364
Q211	8-729-663-47	TRANSISTOR 2SC1364
Q212	8-729-663-47	TRANSISTOR 2SC1364
Q213	8-729-103-43	TRANSISTOR 2SB734
Q401	8-729-101-01	TRANSISTOR PH101
Q501	8-729-101-01	TRANSISTOR PH101
R146 ⚠	1-212-869-00	FUSIBLE 33 5% 1/4W F
R147 ⚠	1-212-869-00	FUSIBLE 33 5% 1/4W F
R148 ⚠	1-212-942-00	FUSIBLE 2.2 5% 1/2W F
R149 ⚠	1-212-849-00	FUSIBLE 4.7 5% 1/4W F
R150 ⚠	1-212-849-00	FUSIBLE 4.7 5% 1/4W F
R239 ⚠	1-206-475-00	METAL 33 5% 2W F
RV101	1-228-222-00	RES, ADJ, METAL GLAZE 50K
RV102	1-228-223-00	RES, ADJ, METAL GLAZE 100K
RV103	1-226-236-00	RES, ADJ, CARBON 10K
RV104	1-226-236-00	RES, ADJ, CARBON 10K
RV105	1-226-239-00	RES, ADJ, CARBON 100K
RV106	1-226-239-00	RES, ADJ, CARBON 100K
S3 ⚠	1-552-535-00	(E).....SWITCH, VOLTAGE CHANGE
S301	1-553-331-21	SWITCH, PUSH
S302	1-553-331-21	SWITCH, PUSH
S601	1-553-693-00	SWITCH, PUSH
S701	1-553-580-00	SWITCH, KEY BOARD
X101	1-527-380-00	CRYSTAL, OSC
	1-526-565-00	(Supplied only with E model for EURO-PLUG) .....AC PLUG ADAPTOR

NOTE:
- Items with no part number and no description are not stocked because they are seldom required for routine service.
- Items marked " ♦ " are not stocked since they are seldom required for routine service. Some delay should be anticipated when ordering these items.
- Due to standardization, parts with part numbers (Δ-ΔΔΔ-ΔΔΔ-XX or Δ-ΔΔΔΔ-ΔΔΔ-X) may be different from those used in the set.

CAPACITORS:
- All capacitors are in μF. Common capacitors are omitted. Refer to the following lists for their part numbers. MF:μF, PF:μμF.

RESISTORS
- All resistors are in ohms. Common 1/4W, 1/8W and 1/16W carbon resistors are omitted. Refer to the following lists for their part numbers.
- F : nonflammable

COILS
- MMH : mH, UH : μH

The components identified by shading and mark ⚠ are critical for safety. Replace only with part number specified.

Les composants identifiés par une trame et une marque ⚠ sont critiques pour la sécurité. Ne les remplacer que par une pièce portant le numéro spécifié.

ELECTROLYTIC CAPACITORS

CAP. (μF)	RATING → : Use the high voltage rated one.					
	6.3 VOLT.	10 VOLT.	16 VOLT.	25 VOLT.	35 VOLT.	50 VOLT.
	PART No.	PART No.	PART No.	PART No.	PART No.	PART No.
0.47					→	1-121-726-00
1.0					→	1-121-391-00
2.2					→	1-121-450-00
3.3	→	→	→	1-121-392-00	→	1-121-393-00
4.7	→	→	→	1-121-395-00	→	1-121-396-00
10	→	→	1-121-651-00	1-121-398-00	→	1-121-738-00
22	→	→	1-121-479-00	1-121-480-00	1-121-662-00	1-121-152-00
33	→	→	1-121-403-00	1-121-404-00	1-121-652-00	1-121-405-00
47	→	• 1-121-352-00	1-121-409-00	1-121-410-00	1-121-653-00	1-121-411-00
100	→	1-121-414-00	1-121-415-00	1-121-416-00	1-121-357-00	1-121-417-00
220	1-121-419-00	1-121-420-00	1-121-421-00	1-121-422-00	1-121-261-00	1-121-423-00
330	1-121-751-00	1-121-805-00	1-121-521-00	1-121-654-00	1-121-655-00	1-121-656-00
470	1-121-424-00	1-121-425-00	1-121-426-00	1-121-733-00	1-121-361-00	1-121-810-00
1000	–	1-121-736-00	1-121-245-00	1-121-657-00	1-121-388-00	1-123-061-00
2200	1-121-658-00	1-121-659-00	1-121-660-00	1-123-067-00	1-121-984-00	–
3300	1-121-661-00	1-123-075-00	1-123-071-00	–	–	–

CAP. (μF)	100 VOLT.	160 VOLT.	250 VOLT.	350 VOLT.
	PART No.	PART No.	PART No.	PART No.
0.47	–	–	–	–
1.0	1-123-249-00	1-123-252-00	1-123-003-00	1-121-168-00
2.2	1-123-250-00	1-123-026-00	–	1-123-028-00
3.3	1-121-995-00	–	1-123-004-00	1-123-006-00
4.7	1-123-255-00	1-121-246-00	1-121-759-00	1-123-007-00
10	1-121-126-00	1-121-999-00	1-123-254-00	1-123-008-00
22	1-121-996-00	1-123-253-00	1-123-005-00	1-123-022-00
33	1-121-997-00	1-121-757-00	–	–
47	1-123-251-00	1-121-919-00	–	–
100	1-123-084-00	–	–	–

CERAMIC CAPACITORS

RATING							
CAP. (pF)	50 VOLT. PART No.	CAP. (pF)	50 VOLT. PART No.	CAP. (pF)	50 VOLT. PART No.	CAP. (μF)	50 VOLT. PART No.
0.5	1-101-837-00	22	1-102-959-00	150	1-101-361-00	0.001	1-102-074-00
0.75	1-101-586-00	24	1-102-960-00	160	1-101-367-00	0.0012	1-102-118-00
1.0	1-102-934-00	27	1-102-961-00	180	1-102-976-00	0.0015	1-102-119-00
1.5	1-101-576-00	30	1-102-962-00	200	1-102-977-00	0.0018	1-102-120-00
2.0	1-102-935-00	33	1-102-963-00	220	1-102-978-00	0.0022	1-102-121-00
3	1-102-936-00	36	1-102-964-00	240	1-102-979-00	0.0027	1-102-122-00
4	1-102-937-00	39	1-102-965-00	270	1-102-980-00	0.0033	1-102-123-00
5	1-102-942-00	43	1-102-966-00	300	1-102-981-00	0.0039	1-102-124-00
6	1-102-943-00	47	1-101-880-00	330	1-102-820-00	0.0047	1-102-125-00
7	1-102-944-00	51	1-101-882-00	360	1-102-821-00	0.0056	1-102-126-00
8	1-102-945-00	56	1-101-884-00	390	1-102-822-00	0.0068	1-102-127-00
9	1-102-946-00	62	1-101-886-00	430	1-102-823-00	0.0082	1-102-128-00
10	1-102-947-00	68	1-101-888-00	470	1-102-824-00	0.01	1-102-129-00
11	1-102-948-00	75	1-101-890-00	510	1-101-059-00	0.022	1-101-005-00
12	1-102-949-00	82	1-102-971-00	560	1-102-115-00	0.047	1-101-006-00
13	1-102-950-00	91	1-102-972-00	680	1-102-116-00		
15	1-102-951-00	100	1-102-973-00	820	1-102-117-00		
16	1-102-952-00	110	1-102-815-00				
18	1-102-953-00	120	1-102-816-00				
20	1-102-958-00	130	1-101-081-00				

0.001μF = 1,000pF

CERAMIC (SEMICONDUCTOR) CAPACITORS

RATING → : Use the high voltage rated one.					
CAP. (μF)	25 VOLT. PART No.	50 VOLT. PART No.	CAP. (μF)	25 VOLT. PART No.	50 VOLT. PART No.
0.001	→	1-161-039-00	0.018	1-161-016-00	1-161-054-00
0.0012	→	1-161-040-00	0.022	1-161-017-00	1-161-055-00
0.0015		1-161-041-00	0.027	1-161-018-00	1-161-056-00
0.0018		1-161-042-00	0.033	1-161-019-00	1-161-057-00
0.0022		1-161-043-00	0.039	1-161-010-00	1-161-058-00
0.0027	→	1-161-044-00	0.047	1-161-021-00	1-161-059-00
0.0033	→	1-161-045-00	0.056	→	1-161-060-00
0.0039	→	1-161-046-00	0.068	→	1-161-061-00
0.0047	→	1-161-047-00	0.082	1-161-024-00	1-161-062-00
0.0056	→	1-161-048-00	0.1	1-161-025-00	1-161-063-00
0.0068	→	1-161-049-00			
0.0082	1-161-012-00	1-161-050-00			
0.01	1-161-013-00	1-161-051-00			
0.012	→	1-161-052-00			
0.015	1-161-015-00	1-161-053-00			

MYLAR CAPACITORS

CAP. (μF)	RATING 50 VOLT. PART No.	100 VOLT. PART No.	200 VOLT. PART No.	CAP. (μF)	50 VOLT. PART No.	100 VOLT. PART No.	200 VOLT. PART No.	CAP. (μF)	50 VOLT. PART No.	100 VOLT. PART No.	200 VOLT. PART No.
0.001	1-108-227-00	1-108-365-00	1-108-409-00	0.01	1-108-239-00	1-108-377-00	1-108-421-00	0.1	1-108-251-00	1-108-389-00	1-108-433-00
0.0012	1-108-351-00	1-108-366-00	1-108-410-00	0.012	1-108-357-00	1-108-378-00	1-108-422-00	0.12	1-108-363-00	1-108-390-00	1-108-434-00
0.0015	1-108-228-00	1-108-367-00	1-108-411-00	0.015	1-108-240-00	1-108-379-00	1-108-423-00	0.15	1-108-252-00	1-108-391-00	1-108-435-00
0.0018	1-108-352-00	1-108-368-00	1-108-412-00	0.018	1-108-358-00	1-108-380-00	1-108-424-00	0.18	1-108-364-00	1-108-392-00	1-108-436-00
0.0022	1-108-230-00	1-108-369-00	1-108-413-00	0.022	1-108-242-00	1-108-381-00	1-108-425-00	0.22	1-108-254-00	1-108-393-00	1-108-437-00
0.0027	1-108-353-00	1-108-370-00	1-108-414-00	0.027	1-108-359-00	1-108-382-00	1-108-426-00	0.27	1-108-854-00	–	–
0.0033	1-108-232-00	1-108-371-00	1-108-415-00	0.033	1-108-244-00	1-108-383-00	1-108-427-00	0.33	1-108-855-00	–	–
0.0039	1-108-354-00	1-108-372-00	1-108-416-00	0.039	1-108-360-00	1-108-384-00	1-108-428-00	0.39	1-108-856-00	–	–
0.0047	1-108-234-00	1-108-373-00	1-108-417-00	0.047	1-108-246-00	1-108-385-00	1-108-429-00	0.47	1-108-857-00	–	–
0.0056	1-108-355-00	1-108-374-00	1-108-418-00	0.056	1-108-361-00	1-108-386-00	1-108-430-00				
0.0068	1-108-237-00	1-108-375-00	1-108-419-00	0.068	1-108-249-00	1-108-387-00	1-108-431-00				
0.0082	1-108-356-00	1-108-376-00	1-108-420-00	0.082	1-108-362-00	1-108-388-00	1-108-432-00				

TANTALUM CAPACITORS

CAP. (μF)	RATING 3.15 VOLT. PART No.	6.3 VOLT. PART No.	10 VOLT. PART No.	16 VOLT. PART No.	20 VOLT. PART No.	25 VOLT. PART No.	35 VOLT. PART No.
					→ : Use the high voltage rated one.		
0.01					→	→	1-131-396-00
0.015						→	1-131-397-00
0.022						→	1-131-398-00
0.033						→	1-131-399-00
0.047						→	1-131-400-00
0.068					→	→	1-131-401-00
0.1					→	→	1-131-402-00
0.15					→	→	1-131-403-00
0.22					→	→	1-131-404-00
0.33					→	1-131-409-00	1-131-405-00
0.47	–	–	–	–	1-131-412-00	→	1-131-406-00
0.68	–	–	–	1-131-415-00	→	1-131-410-00	1-131-407-00
1.0	–	–	1-131-418-00	–	1-131-413-00	→	1-131-408-00
1.5	–	1-131-421-00	–	1-131-416-00	→	1-131-411-00	1-131-348-00
2.2	1-131-424-00	–	1-131-419-00	–	1-131-414-00	1-131-355-00	1-131-349-00
3.3	–	1-131-422-00	–	1-131-417-00	1-131-362-00	1-131-356-00	1-131-350-00
4.7	1-131-425-00	–	1-131-420-00	1-131-369-00	1-131-363-00	1-131-357-00	1-131-351-00
6.8	–	1-131-423-00	1-131-376-00	1-131-370-00	1-131-364-00	1-131-358-00	1-131-352-00
10	1-131-426-00	1-131-383-00	1-131-377-00	1-131-371-00	1-131-365-00	1-131-359-00	1-131-353-00
15	1-131-390-00	1-131-384-00	1-131-378-00	1-131-372-00	1-131-366-00	1-131-360-00	–
22	1-131-391-00	1-131-385-00	1-131-379-00	1-131-373-00	1-131-367-00		
33	1-131-392-00	1-131-386-00	1-131-380-00	1-131-374-00			
47	1-131-393-00	1-131-387-00	1-131-381-00	–			
68	1-131-394-00	1-131-388-00	–	–			
100	1-131-395-00	–	–	–			

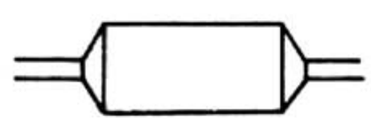

TANTALUM CAPACITORS

CAP. (μF)	RATING 3 VOLT. PART No.	6.3 VOLT. PART No.	10 VOLT. PART No.	16 VOLT. PART No.	20 VOLT. PART No.	35 VOLT. PART No.
0.033						1-131-273-00
0.047						1-131-274-00
0.068						1-131-275-00
0.1						1-131-276-00
0.15						1-131-277-00
0.22			–	–	1-131-262-00	1-131-278-00
0.33			–	–	1-131-263-00	1-131-279-00
0.47			1-131-169-00	–	1-131-264-00	1-131-280-00
0.68			–	1-131-258-00	1-131-265-00	1-131-281-00
1.0			1-131-254-00	–	1-131-266-00	1-131-282-00
1.5		1-131-250-00	–	–	1-131-267-00	1-131-283-00
2.2		–	–	1-131-259-00	1-131-268-00	1-131-284-00
3.3		–	1-131-255-00	–	1-131-269-00	–
4.7		1-131-251-00	1-131-171-00	–	1-131-270-00	–
6.8		–	–	1-131-260-00	1-131-271-00	–
10	–	–	1-131-256-00	–	1-131-272-00	–
15	–	1-131-252-00	–	1-131-261-00		
22	–	–	1-131-257-00	–		
33	1-131-176-00	1-131-253-00	1-131-173-00	–		
47	1-131-288-00	1-131-174-00	–	–		
100	1-131-177-00					

1/16 WATT CARBON RESISTOR

Ω	Part No.	Ω	Part No.	Ω	Part No.	Ω	Part No.	Ω	Part No.	Ω	Part No.	Ω	Part No.
2.0	—	13	—	91	1-210-354-00	620	1-210-367-00	4.3k	1-209-772-00	30k	1-210-380-00	200k	1-210-839-00
2.2	—	15	—	100	1-210-355-00	680	1-210-106-00	4.7k	1-209-773-00	33k	1-210-381-00	220k	1-210-840-00
2.4	—	16	—	110	1-210-356-00	750	1-210-107-00	5.1k	1-209-774-00	36k	1-210-394-00	240k	—
2.7	—	18	1-211-688-00	120	1-210-357-00	820	1-210-108-00	5.6k	1-209-775-00	39k	1-210-382-00	270k	1-210-841-00
3.0	—	20	—	130	1-210-358-00	910	1-210-368-00	6.2k	1-209-776-00	43k	1-210-383-00	300k	—
3.3	—	22	—	150	1-210-102-00	1.0k	1-204-122-00	6.8k	1-209-777-00	47k	1-210-384-00	330k	1-210-842-00
3.6	—	24	—	160	1-210-359-00	1.1k	1-210-369-00	7.5k	1-209-778-00	51k	1-210-385-00	360k	—
3.9	—	27	—	180	1-210-360-00	1.2k	1-209-765-00	8.2k	1-209-779-00	56k	1-210-386-00	390k	1-210-843-00
4.3	—	30	1-210-845-00	200	1-210-361-00	1.3k	1-210-370-00	9.1k	1-209-780-00	62k	1-210-387-00	430k	—
4.7	—	33	1-210-846-00	220	1-210-362-00	1.5k	1-209-766-00	10k	1-209-781-00	68k	1-210-388-00	470k	1-210-844-00
5.1	—	36	1-210-847-00	240	1-209-762-00	1.6k	1-210-371-00	11k	1-210-374-00	75k	1-210-389-00	510k	—
5.6	—	39	1-210-848-00	270	1-210-363-00	1.8k	1-209-878-00	12k	1-210-111-00	82k	1-210-390-00	560k	1-211-695-00
6.2	—	43	1-210-849-00	300	1-210-364-00	2.0k	1-209-767-00	13k	1-210-375-00	91k	1-210-391-00	620k	—
6.8	—	47	1-210-395-00	330	1-209-763-00	2.2k	1-209-768-00	15k	1-210-112-00	100k	1-210-115-00	680k	1-211-696-00
7.5	—	51	1-210-101-00	360	1-210-103-00	2.4k	1-209-769-00	16k	1-210-376-00	110k	—	750k	—
8.2	—	56	1-210-351-00	390	1-210-365-00	2.7k	1-209-770-00	18k	1-210-113-00	120k	1-210-836-00	820k	1-211-698-00
9.1	—	62	1-210-352-00	430	1-210-366-00	3.0k	1-210-372-00	20k	1-210-377-00	130k	—	910k	—
10	—	68	1-210-353-00	470	1-209-764-00	3.3k	1-204-123-00	22k	1-210-114-00	150k	1-210-837-00	1 M	—
11	—	75	1-210-392-00	510	1-210-104-00	3.6k	1-210-373-00	24k	1-210-378-00	160k	—		
12	—	82	1-210-393-00	560	1-210-105-00	3.9k	1-209-771-00	27k	1-210-379-00	180k	1-210-838-00		

1/8 WATT CARBON RESISTOR

Ω	Part No.	Ω	Part No.	Ω	Part No.	Ω	Part No.	Ω	Part No.	Ω	Part No.	Ω	Part No.
2.0	—	13	1-246-821-00	91	1-246-831-00	620	1-246-841-00	4.3k	1-246-851-00	30k	1-246-861-00	200k	1-246-871-00
2.2	1-246-751-00	15	1-246-761-00	100	1-246-771-00	680	1-246-781-00	4.7k	1-246-791-00	33k	1-246-801-00	220k	1-246-811-00
2.4	—	16	1-246-822-00	110	1-246-832-00	750	1-246-842-00	5.1k	1-246-852-00	36k	1-246-862-00	240k	1-247-054-00
2.7	1-246-752-00	18	1-246-762-00	120	1-246-772-00	820	1-246-782-00	5.6k	1-246-792-00	39k	1-246-802-00	270k	1-247-046-00
3.0	—	20	1-246-823-00	130	1-246-833-33	910	1-246-843-00	6.2k	1-246-853-00	43k	1-246-863-00	300k	1-247-055-00
3.3	1-246-753-00	22	1-246-763-00	150	1-246-773-00	1.0k	1-246-783-00	6.8k	1-246-793-00	47k	1-246-803-00	330k	1-247-047-00
3.6	—	24	1-246-824-00	160	1-246-834-00	1.1k	1-246-844-00	7.5k	1-246-854-00	51k	1-246-864-00	360k	1-247-056-00
3.9	1-246-754-00	27	1-246-764-00	180	1-246-774-00	1.2k	1-246-784-00	8.2k	1-246-794-00	56k	1-246-804-00	390k	1-247-048-00
4.3	—	30	1-246-825-00	200	1-246-835-00	1.3k	1-246-845-00	9.1k	1-246-855-00	62k	1-246-865-00	430k	1-247-057-00
4.7	1-246-755-00	33	1-246-765-00	220	1-246-775-00	1.5k	1-246-785-00	10k	1-246-795-00	68k	1-246-805-00	470k	1-247-049-00
5.1	—	36	1-246-826-00	240	1-246-836-00	1.6k	1-246-846-00	11k	1-246-856-00	75k	1-246-866-00	510k	1-247-058-00
5.6	1-246-756-00	39	1-246-766-00	270	1-246-776-00	1.8k	1-246-786-00	12k	1-246-796-00	82k	1-246-806-00	560k	1-247-050-00
6.2	—	43	1-246-827-00	300	1-246-837-00	2.0k	1-246-847-00	13k	1-246-857-00	91k	1-246-867-00	620k	1-247-059-00
6.8	1-246-757-00	47	1-246-767-00	330	1-246-777-00	2.2k	1-246-787-00	15k	1-246-797-00	100k	1-246-807-00	680k	1-247-051-00
7.5	1-246-818-00	51	1-246-828-00	360	1-246-838-00	2.4k	1-246-848-00	16k	1-246-858-00	110k	1-246-868-00	750k	1-247-060-00
8.2	1-246-758-00	56	1-246-768-00	390	1-246-778-00	2.7k	1-246-788-00	18k	1-246-798-00	120k	1-246-808-00	820k	1-247-052-00
9.1	1-246-819-00	62	1-246-829-00	430	1-246-839-00	3.0k	1-246-849-00	20k	1-246-859-00	130k	1-246-869-00	910k	1-247-061-00
10	1-246-759-00	68	1-246-769-00	470	1-246-779-00	3.3k	1-246-789-00	22k	1-246-799-00	150k	1-246-809-00	1 M	1-247-053-00
11	1-246-820-00	75	1-246-830-00	510	1-246-840-00	3.6k	1-246-850-00	24k	1-246-860-00	160k	1-246-870-00		
12	1-246-760-00	82	1-246-770-00	560	1-246-780-00	3.9k	1-246-790-00	27k	1-246-800-00	180k	1-246-810-00		

1/4 WATT CARBON RESISTORS

Ω	Part No.	Ω	Part No.	Ω	Part No.	Ω	Part No.	Ω	Part No.	Ω	Part No.	Ω	Part No.
1.0	1-246-401-00	10	1-246-425-00	100	1-246-449-00	1.0k	1-246-473-00	10k	1-246-497-00	100k	1-246-521-00	1.0M	1-246-545-00
1.1	1-246-402-00	11	1-246-426-00	110	1-246-450-00	1.1k	1-246-474-00	11k	1-246-498-00	110k	1-246-522-00	1.1M	1-210-814-00
1.2	1-246-403-00	12	1-246-427-00	120	1-246-451-00	1.2k	1-246-475-00	12k	1-246-499-00	120k	1-246-523-00	1.2M	1-210-815-00
1.3	1-246-404-00	13	1-246-428-00	130	1-246-452-00	1.3k	1-246-476-00	13k	1-246-500-00	130k	1-246-524-00	1.3M	1-210-816-00
1.5	1-246-405-00	15	1-246-429-00	150	1-246-453-00	1.5k	1-246-477-00	15k	1-246-501-00	150k	1-246-525-00	1.5M	1-210-817-00
1.6	1-246-406-00	16	1-246-430-00	160	1-246-454-00	1.6k	1-246-478-00	16k	1-246-502-00	160k	1-246-526-00	1.6M	1-210-818-00
1.8	1-246-407-00	18	1-246-431-00	180	1-246-455-00	1.8k	1-246-479-00	18k	1-246-503-00	180k	1-246-527-00	1.8M	1-210-819-00
2.0	1-246-408-00	20	1-246-432-00	200	1-246-456-00	2.0k	1-246-480-00	20k	1-246-504-00	200k	1-246-528-00	2.0M	1-210-820-00
2.2	1-246-409-00	22	1-246-433-00	220	1-246-457-00	2.2k	1-246-481-00	22k	1-246-505-00	220k	1-246-529-00	2.2M	1-210-821-00
2.4	1-246-410-00	24	1-246-434-00	240	1-246-458-00	2.4k	1-246-482-00	24k	1-246-506-00	240k	1-246-530-00	2.4M	1-244-754-00
2.7	1-246-411-00	27	1-246-435-00	270	1-246-459-00	2.7k	1-246-483-00	27k	1-246-507-00	270k	1-246-531-00	2.7M	1-244-755-00
3.0	1-246-412-00	30	1-246-436-00	300	1-246-460-00	3.0k	1-246-484-00	30k	1-246-508-00	300k	1-246-532-00	3.0M	1-244-756-00
3.3	1-246-413-00	33	1-246-437-00	330	1-246-461-00	3.3k	1-246-485-00	33k	1-246-509-00	330k	1-246-533-00	3.3M	1-244-757-00
3.6	1-246-414-00	36	1-246-438-00	360	1-246-462-00	3.6k	1-246-486-00	36k	1-246-510-00	360k	1-246-534-00	3.6M	1-244-758-00
3.9	1-246-415-00	39	1-246-439-00	390	1-246-463-00	3.9k	1-246-487-00	39k	1-246-511-00	390k	1-246-535-00	3.9M	1-244-759-00
4.3	1-246-416-00	43	1-246-440-00	430	1-246-464-00	4.3k	1-246-488-00	43k	1-246-512-00	430k	1-246-536-00	4.3M	1-244-760-00
4.7	1-246-417-00	47	1-246-441-00	470	1-246-465-00	4.7k	1-246-489-00	47k	1-246-513-00	470k	1-246-537-00	4.7M	1-244-761-00
5.1	1-246-418-00	51	1-246-442-00	510	1-246-466-00	5.1k	1-246-490-00	51k	1-246-514-00	510k	1-246-538-00	5.1M	1-244-762-00
5.6	1-246-419-00	56	1-246-443-00	560	1-246-467-00	5.6k	1-246-491-00	56k	1-246-515-00	560k	1-246-539-00		
6.2	1-246-420-00	62	1-246-444-00	620	1-246-468-00	6.2k	1-246-492-00	62k	1-246-516-00	620k	1-246-540-00		
6.8	1-246-421-00	68	1-246-445-00	680	1-246-469-00	6.8k	1-246-493-00	68k	1-246-517-00	680k	1-246-541-00		
7.5	1-246-422-00	75	1-246-446-00	750	1-246-470-00	7.5k	1-246-494-00	75k	1-246-518-00	750k	1-246-542-00		
8.2	1-246-423-00	82	1-246-447-00	820	1-246-471-00	8.2k	1-246-495-00	82k	1-246-519-00	820k	1-246-543-00		
9.1	1-246-424-00	91	1-246-448-00	910	1-246-472-00	9.1k	1-246-496-00	91k	1-246-520-00	910k	1-246-544-00		

HARDWARE NOMENCLATURE

Screw: – P 3 x 10

- *L: Length in mm*
- *D: Diameter in mm*
- *Type of head*
- *Indicated slotted-head only. Unless otherwise indicated, it means cross-recessed head (Phillips type).*

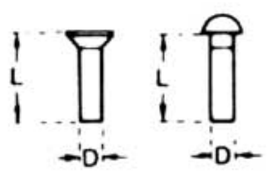

Nut, Washer, Retaining ring: N 3

- *Diameter of usable screw or shaft*
- *Reference designation*

Reference Designation	Shape	Description	Remarks
		SCREWS	
P		pan-head screw	binding-head (B) screw for replacement
PWH		pan-head screw with washer face	binding-head (B) screw and flat washer for replacement
PS PSP		pan-head screw with spring washer	binding-head (B) screw and spring washer for replacement
PSW PSPW		pan-head screw with spring and flat washers	binding-head (B) screw and spring and flat washers for replacement
R		round-head screw	binding-head (B) screw for replacement
K		flat-countersunk-head screw	
RK		oval-countersunk-head screw	
B		binding-head screw	
T		truss-head screw	binding-head (B) screw for replacement
F		flat-fillister-head screw	
RF		fillister-head screw	
BV		braizer-head screw	

Reference Designation	Shape	Description	Remarks
		SELF-TAPPING SCREWS	
TA		self-tapping screw	ex: TA, P 3 x 10
PTP		pan-head self-tapping screw	binding-head self-tapping (TA, B) screw for replacement
PTPWH		pan-head self-tapping screw with washer face	binding-head self tapping (TA, B) screw and flat washer for replacement
PTTWH		pan-head thread-rolling screw with washer face	binding-head (B) screw and flat washer for replacement
		SET SCREWS	
SC		set screw	
SC		hexagon-socket set screw	ex: SC 2.6 x 4, hexagon socket
		NUT	
N		nut	
		WASHERS	
W		flat washer	
SW		spring washer	
LW		internal-tooth lock washer	ex: LW3, internal
LW		external-tooth lock washer	ex: LW3, external
		RETAINING RINGS	
E		retaining ring	
G		grip-type retaining ring	

Sony Corporation

81D05133-1

9-950-632-11

Printed in Japan