PIONEER

Service Manual

CIRCUIT DESCRIPTIONS
REPAIR & ADJUSTMENTS

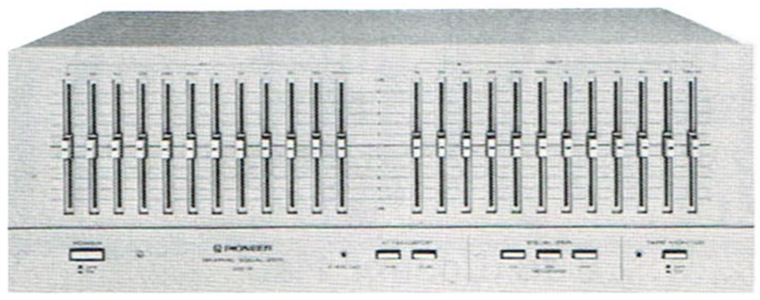

ORDER NO.
ARP-030-0

GRAPHIC EQUALIZER

SG-9

MODEL SG-9 COMES IN SIX VERSIONS DISTINGUISHED AS FOLLOWS:

Type	Voltage	Remakrs
KU	120V	U.S.A. model
KC	120V	Canada model
R	110V-120V and 220V-240V (Switchable)	General export model
R/G	110V-120V and 220V-240V (Switchable)	U.S. Military model
WE	220V – 240V	Europe model
WB	220V – 240V	United Kingdom model

- **This service manual is applicable to the KU type. When repairing the KC, R and R/G types, please see the additional sections in this service manual (P21 – P23). When repairing the WE and WB types, please see the additional service manual (ARP-031).**

CONTENTS

1. SPECIFICATIONS 2
2. FRONT PANEL FACILITIES 3
3. BLOCK DIAGRAM 4
4. CIRCUIT DESCRIPTIONS 4
5. DISASSEMBLY 7
6. PARTS LOCATIONS 8
7. EXPLODED VIEW 9
8. P.C.BOARD CONNECTION DIAGRAM 12
9. SCHEMATIC DIAGRAM 15
10. ELECTRICAL PARTS LIST 18
11. PACKING 20

ADDITIONAL SERVICE MANUAL FOR KC,R AND R/G TYPES 21

PIONEER ELECTRONIC CORPORATION 4-1, Meguro 1-Chome, Meguro-ku, Tokyo 153, Japan
U.S. PIONEER ELECTRONICS CORPORATION 85 Oxford Drive, Moonachie, New Jersey 07074, U.S.A.
PIONEER ELECTRONIC (EUROPE) N.V. Luithagen-Haven 9, 2030 Antwerp, Belgium
PIONEER ELECTRONICS AUSTRALIA PTY. LTD. 178-184 Boundary Road, Braeside, Victoria 3195, Australia

1981 Printed in Japan

www.hiflengine.com

1. SPECIFICATIONS

Equalizer Section

Equalizer Range
(Individual channel adjust) ..... ±10 dB,
16 Hz, 32 Hz, 64 Hz, 125 Hz, 250 Hz, 500 Hz,
1 kHz, 2 kHz, 4 kHz, 8 kHz, 16 kHz, 32 kHz
Total Harmonic Distortion
20 Hz — 20 kHz, All control; Flat, Output: 1 V 0.006%
10 Hz — 30 kHz, All Control; Flat, Output: 1 V 0.02%
1 kHz, All Control; Max., Output: 3 V 0.01%
1 kHz, All Control; Flat, Output: 2 V 0.005%
1 kHz, All Control; Min., Output: 1 V 0.02%
Insertion Loss ..... 0 dB (Control; Flat)
Max. Output Voltage
(1 kHz, T.H.D.: 0.02%, RL 47 kΩ) ..... 7.5 V
Frequency Response ..... 5 Hz — 100 kHz $^{+0}_{-3}$ dB
Signal to Noise Ratio
(IHF, A Network, short-circuited, 1 V Output) ..... 92 dB
Input Impedance ..... 50 kΩ
Output Impedance ..... 600 Ω

Miscellaneous

Power Requirements ..... AC 120 volts/60 Hz
Power Consumption ..... 25 watts (UL), 30 VA (CSA)
Dimensions ..... 420 (W) x 150 (H) x 355 (D) mm
16-1/2 x 5-7/8 x 14 in
Weight ..... 7.1 kg, 15 lb 8 oz

Furnished Parts

Connection Cord with Pin Plugs 2
Operating Instructions 1

NOTE:
Specifications and the design subject to possible modification without notice due to improvements.

www.hifiengine.com

2. FRONT PANEL FACILITIES

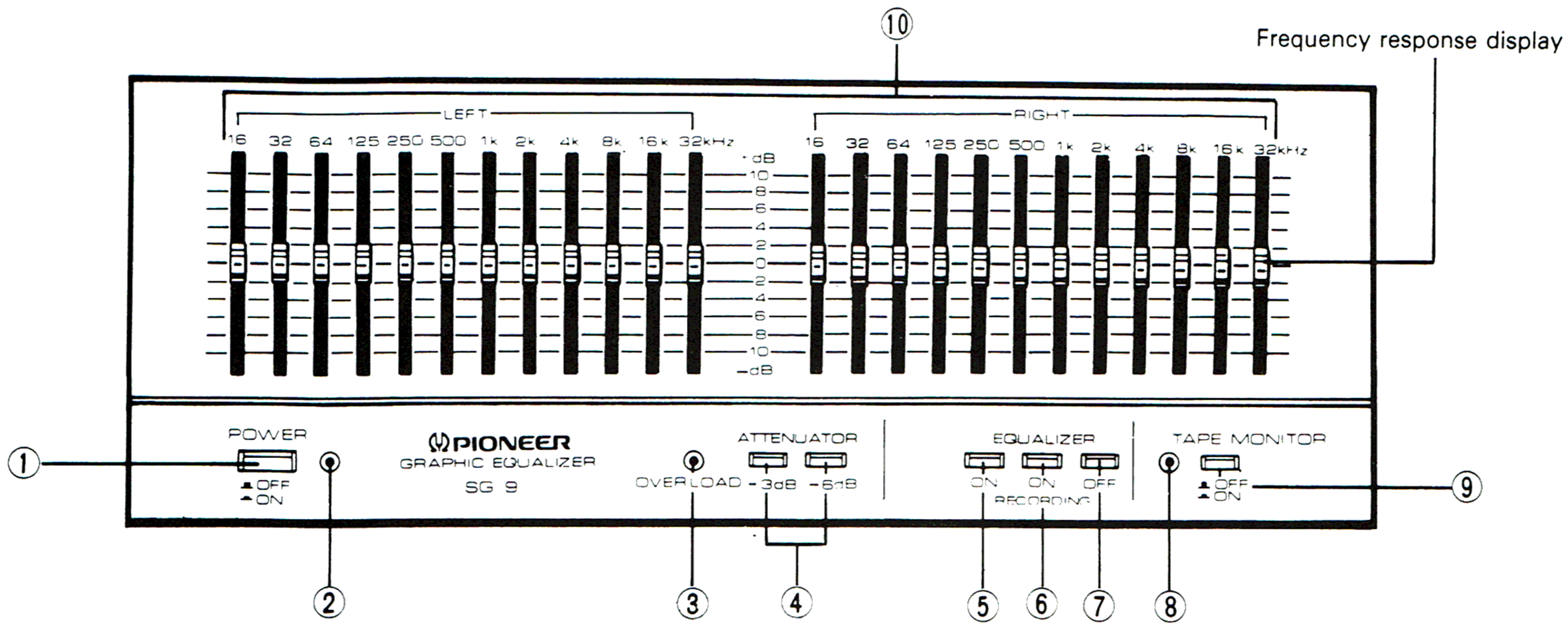

① POWER SWITCH

Power is supplied to the model SG-9 when this switch is depressed. The power indicator comes on as soon as the power is supplied.

② POWER INDICATOR

This comes on as soon as the SG-9's power switch is set to ON to indicate that power is being supplied.

③ OVERLOAD INDICATOR

This indicator comes on when the octave control is set too high and the peaks come in only part of the frequencies, or when a strong input signal is applied directly from the preamplifier. Adjust the attenuator switch and the octave control across a range where this indicator does not light up.

④ ATTENUATOR SWITCHES

These are used to attenuate the input signal before equalization. Under normal conditions, operate the octave control knob with the switches at the 0 dB (released) position. With a program displaying a wide dynamic range or with equalization, depress either the −3 dB or −6 dB switch when the overload indicator comes on.

⑤ EQUALIZER ON SWITCH

Depress this switch to equalize the signals fed from the EQUALIZER INPUT jacks. The frequency response display will come on, and signals featuring an equalization only will be fed out from the model SG-9's OUTPUT jacks.

⑥ EQUALIZER ON RECORDING SWITCH

Depress this switch when recording a program source whose signals feature an equalization onto a tape in a deck connected to the model SG-9's TAPE jacks. This will allow signals with the equalizing sound to be made available from both the SG-9's OUTPUT jacks and the TAPE REC jacks.

⑦ EQUALIZER OFF SWITCH

Depress this switch to cut off the equalization effect. This will allow signals without an equalizing sound to be made available from both the SG-9's OUTPUT jacks and the TAPE REC jacks.

NOTE:
The equalizer on switch, the equalizer on recording switch and equalizer off switch are all coupled. When you depress one switch, make sure that all the others are released. Do not depress more than one switch at a time.

⑧ TAPE MONITOR INDICATOR

This comes on when the tape monitor switch is depressed.

⑨ TAPE MONITOR SWITCH

Depress this switch to monitor the sound on the tape as it is being recorded or when playing back a tape using a tape deck connected to the SG-9's TAPE jacks. (The tape monitor indicator comes on.)

⑩ OCTAVE CONTROLS

These controls provide continuous level variation of its indicated frequency from −10 dB to +10 dB. Each frequency segment becomes enhanced when its control is positioned above center (0) and attenuated when positioned below center. With all controls set to 0, the input signal is fed to the OUTPUT jacks unchanged. The frequency response display on the octave controls displays the level variation of the frequency response of the output signals.

www.hifiengine.com

3. BLOCK DIAGRAM

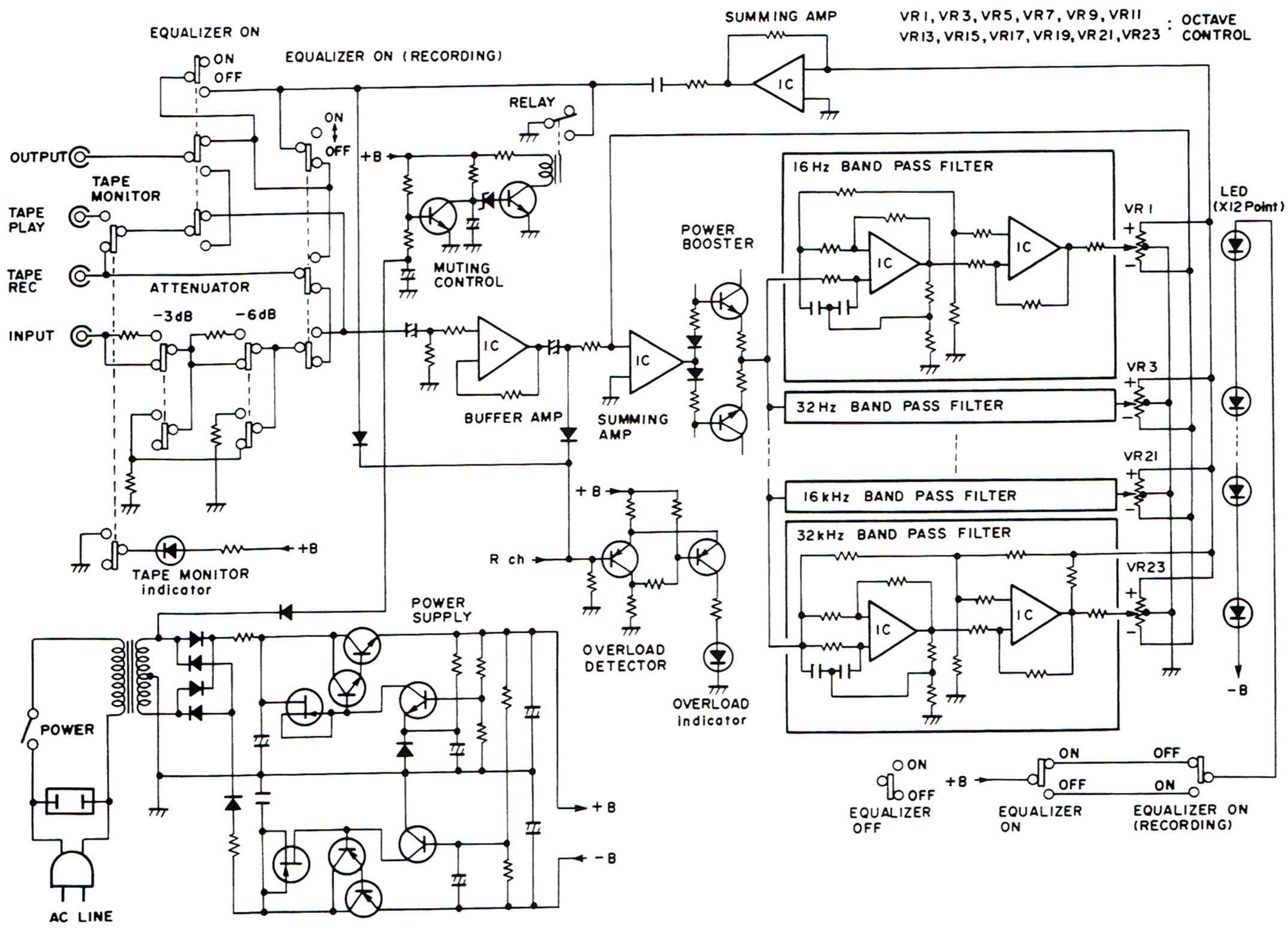

4. CIRCUIT DESCRIPTIONS

Graphic Equalizer Section

In a graphic equalizer the audio frequency spectrum is divided up into a number of narrower frequency bands by a range of band-pass filters. The level of each band may be increased or attenuated independently as desired.

In the SG-9, the 16Hz ~ 32kHz frequency spectrum is divided into 12 octaves, the center frequency of each of the 12 bands being 16Hz, 32Hz, 64Hz, 125Hz, 250Hz, 500Hz, 1kHz, 2kHz, 4kHz, 8kHz, 16kHz, and 32kHz. The level variation range in each band is ±10dB (see Fig. 4-1).

In the block diagram shown in Fig. 4-2, A_1 to A_5 are operational amplifiers (OP-AMP). A_1 is a buffer amplifier, A_2 a summing amplifier, A_3 and A_4 band-pass filters, and A_5 another summing amplifier. There is a total of 12 band-pass filters, each being basically the same as each other. The difference lies in the constants for the R_0 and C_0 elements used to fix the center frequencies, and the R_1 and R_2 elements used to fix the Q values.

After passing through A_1, the input signal is inverted by A_2 (see Fig. 4-2), and then applied to the band-pass filters via a power booster stage. The output is then either fed back to the input of A_2 (summing amplifier) or passed on to A_5 (the other summing amplifier) depending on the position of the level control VR, thereby determining whether the level for the relevant band is boosted or

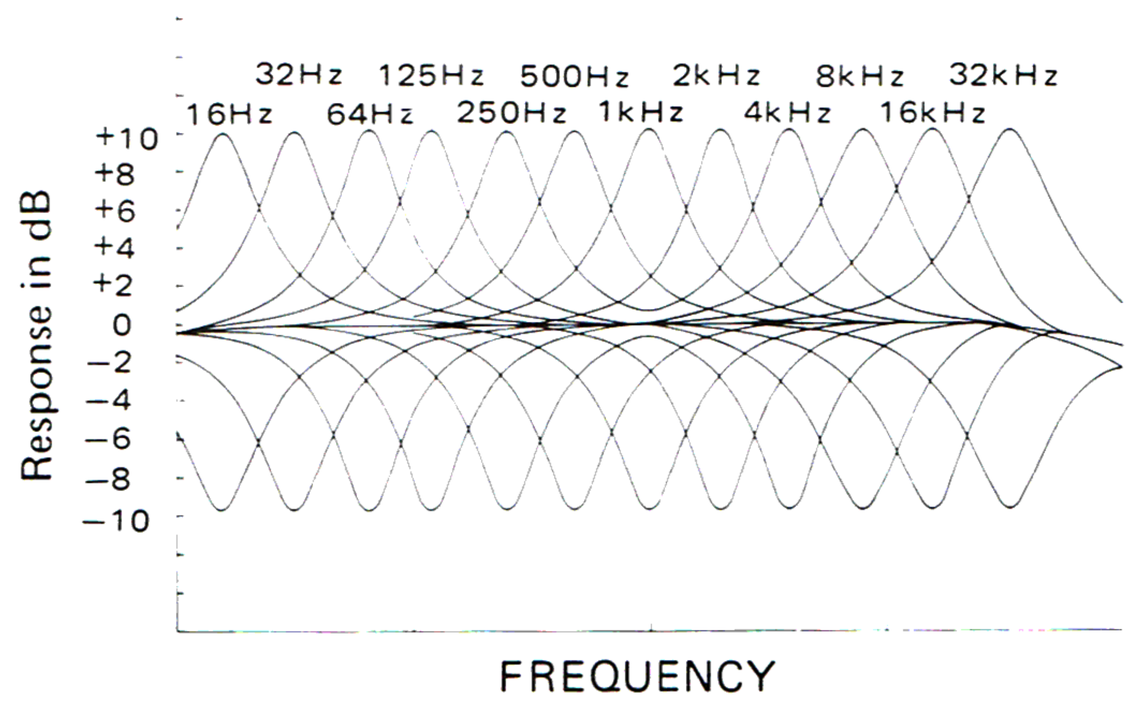

Fig. 4-1 Octave control variation curve

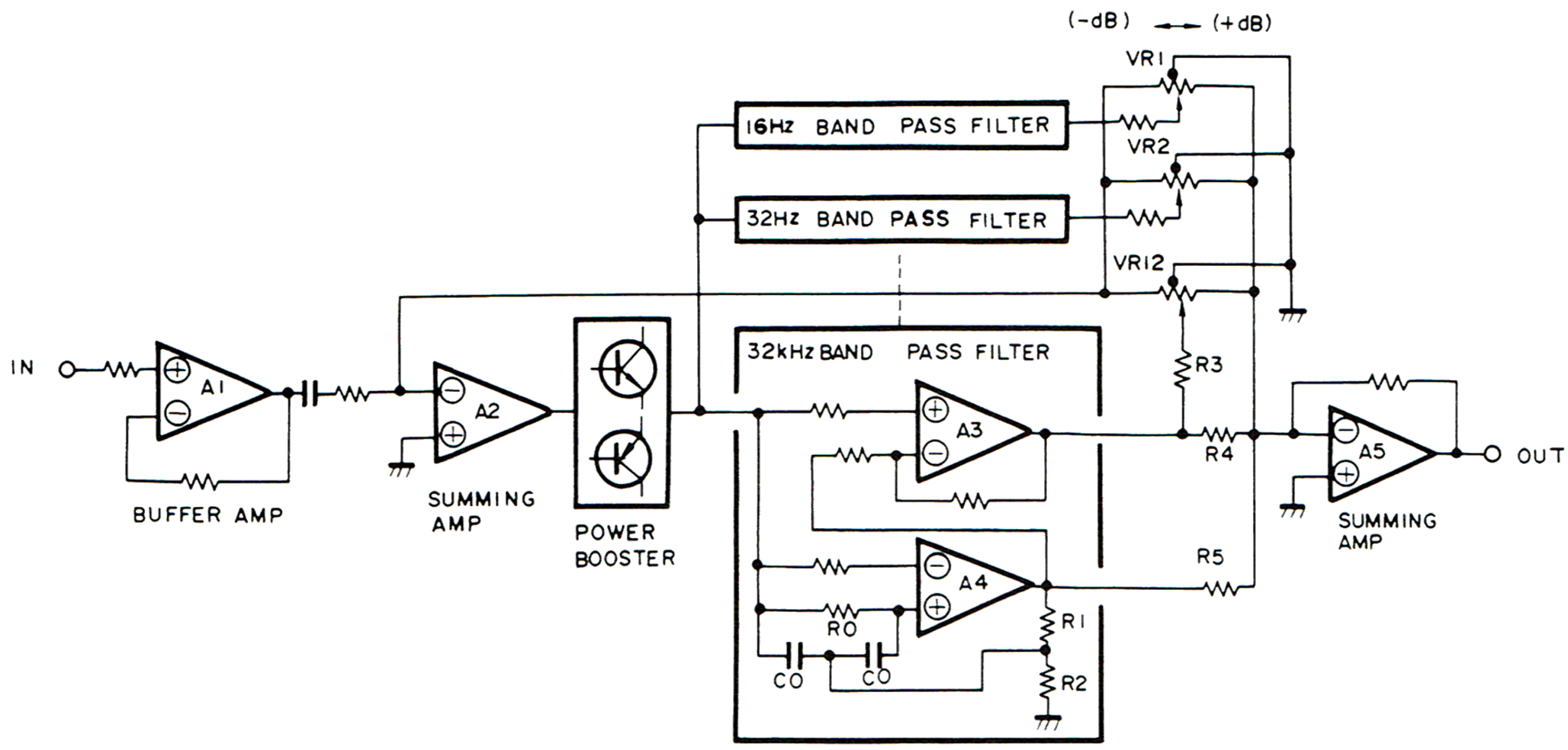

Fig. 4-2 Block diagram of graphic equalizer section

attenuated. For example, if the 16Hz band-pass filter output VR_1 is set in an attenuation (−dB) position, the output signal from this filter will be fed back to the input of A_2, resulting in the A_2 output being attenuated by an amount proportional to the amount of negative feedback at that frequency. The A_2 output is then applied to A_5 via the notch filter (A_4)* of the 32kHz band-pass filter and R_5, and mixed with the outputs from the other band-pass filters. Consequently, the frequency response of the A_5 output will be attenuated in the 16Hz region. If VR_1 is returned to the center position (0dB), the 16Hz band-pass filter output is connected to ground, resulting in the frequency response of the A_2 output signal being made flat in the 16Hz region. The signal is simply passed via the notch filter of the 32kHz band-pass filter and R_5 to A_5.

If VR_1 is set in a booster (+dB) position, the band-pass filter output is applied to A_5 where it is added to the signal output from the notch filter of the 32kHz band-pass filter and R_5 (which has a flat frequency response in the 16Hz region), thereby resulting in an A_5 output with a frequency response boosted around 16Hz.

**Notch Filter*

The characteristic curve described by notch filters is outlined in Fig. 4-3. For example, in the notch filter employed with the 32kHz band-pass filter, the gain at 32kHz is attenuated, while the gain at all other frequencies is constant.

Overload Detector

This circuit is employed to detect the presence of signal levels in excess of a certain maximum level (approx. 8Vrms) at the left and right channel input and output stages, and subsequently activate the OVERLOAD indicator lamp (see Fig. 4-4).

The left and right channel input and output signals are applied via the D_5 ~ D_8 diodes to the base of Q_{32} of the Q_{32}/Q_{33} Schmitt trigger. If the level of any of these 4 signals should exceed the specified 8Vrms, Q_{32} will turn off (normally on), resulting in Q_{33} being turned on (normally off) and the OVERLOAD indicator lamp (D_{19}) lighting up.

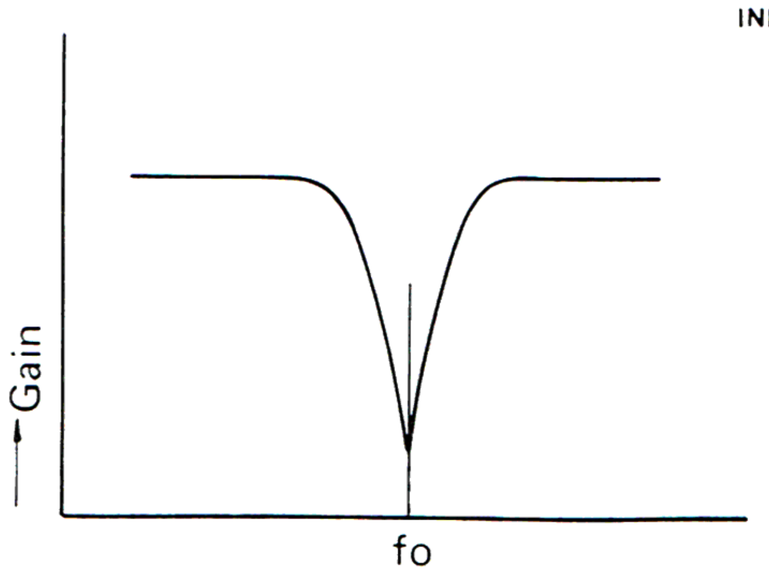

Fig. 4-3

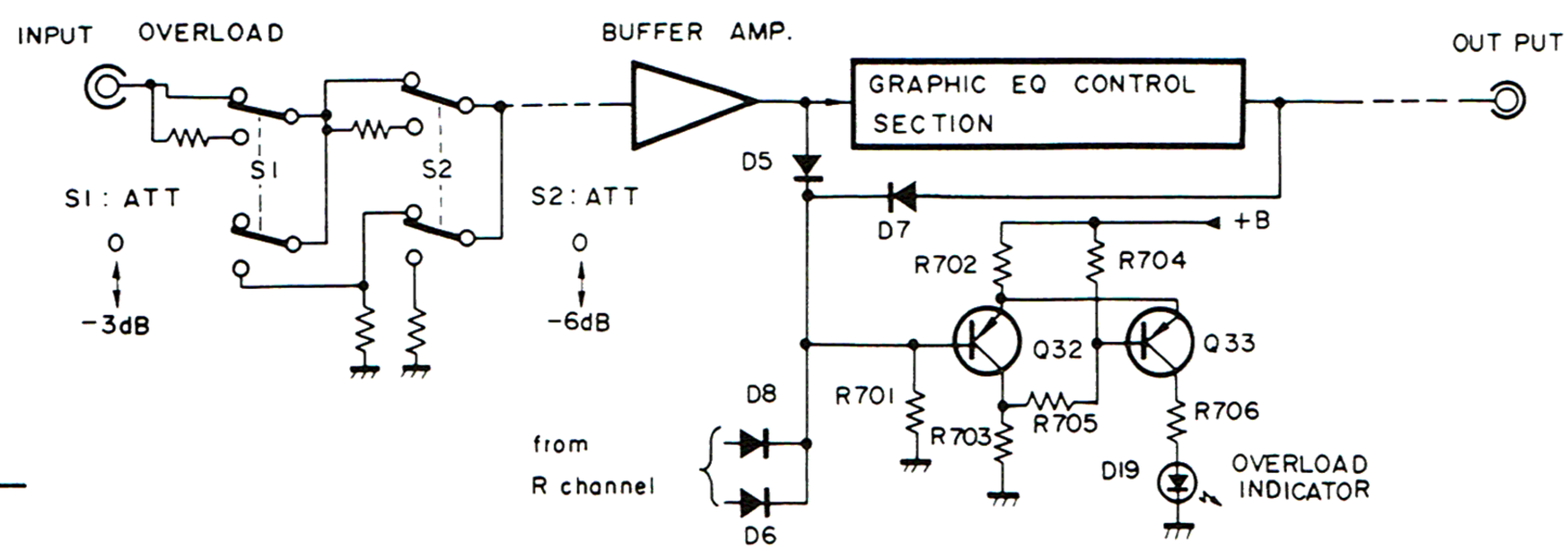

Fig. 4-4 Overload detector

www.hifiengine.com

Muting Circuit

This circuit is designed to eliminate the unwanted click noise generated when the POWER switch is turned on and off (see Fig. 4-5).

The −B side is the negative power supply side where the time constant is considerably smaller than on the +B side. And once the POWER switch has been turned off, the graphic equalizer output is short circuited to ground by a relay.

When the POWER switch is first turned on, Q_{34} will remain off because of −B. The Q_{34} collector voltage will consequently increase, the rate of increase being determined by the R_{803}/C_{802} time constant. Once this voltage exceeds the D_{11} zener voltage, Q_{35} will become biased in the forward direction and consequently turn on. The relay is then activated, disconnecting the graphic equalizer output from ground. This whole operation takes about 5 seconds.

When the POWER switch is turned off again, −B is decreased very rapidly, resulting in Q_{34} being turned on because of the +B residual voltage. Consequently, D_{11} is cut off, resulting in Q_{35} being turned off, and the graphic equalizer output being short-circuited to ground.

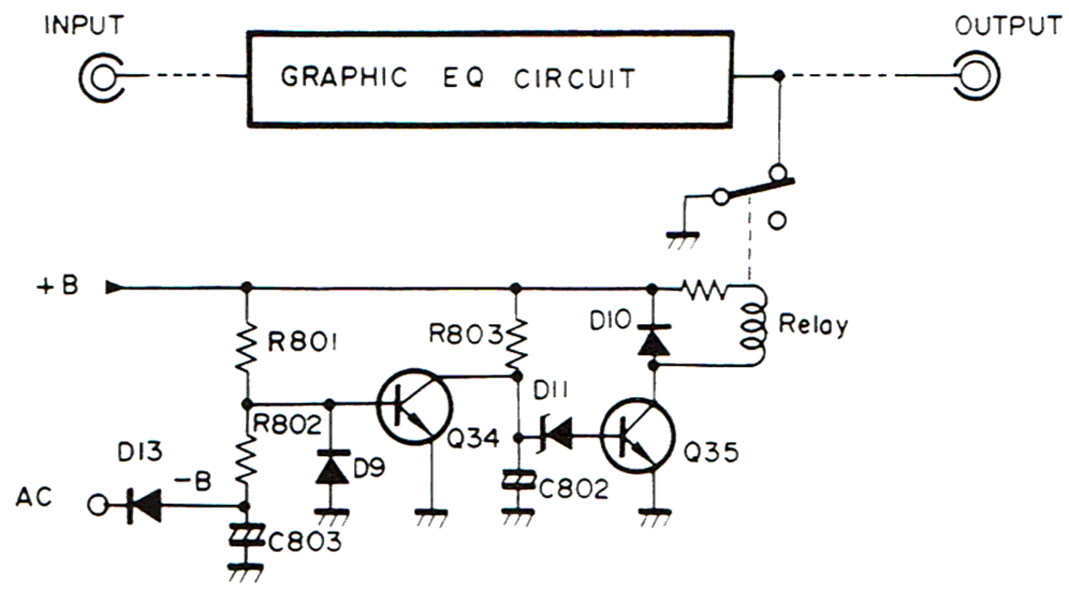

Fig. 4-5 Muting circuit

Signal Path

The input and output terminals, and the graphic equalizer circuit of the SG-9 are connected by operation of the TAPE MONITOR and EQUALIZER switches as shown in Table 1.

Table 1

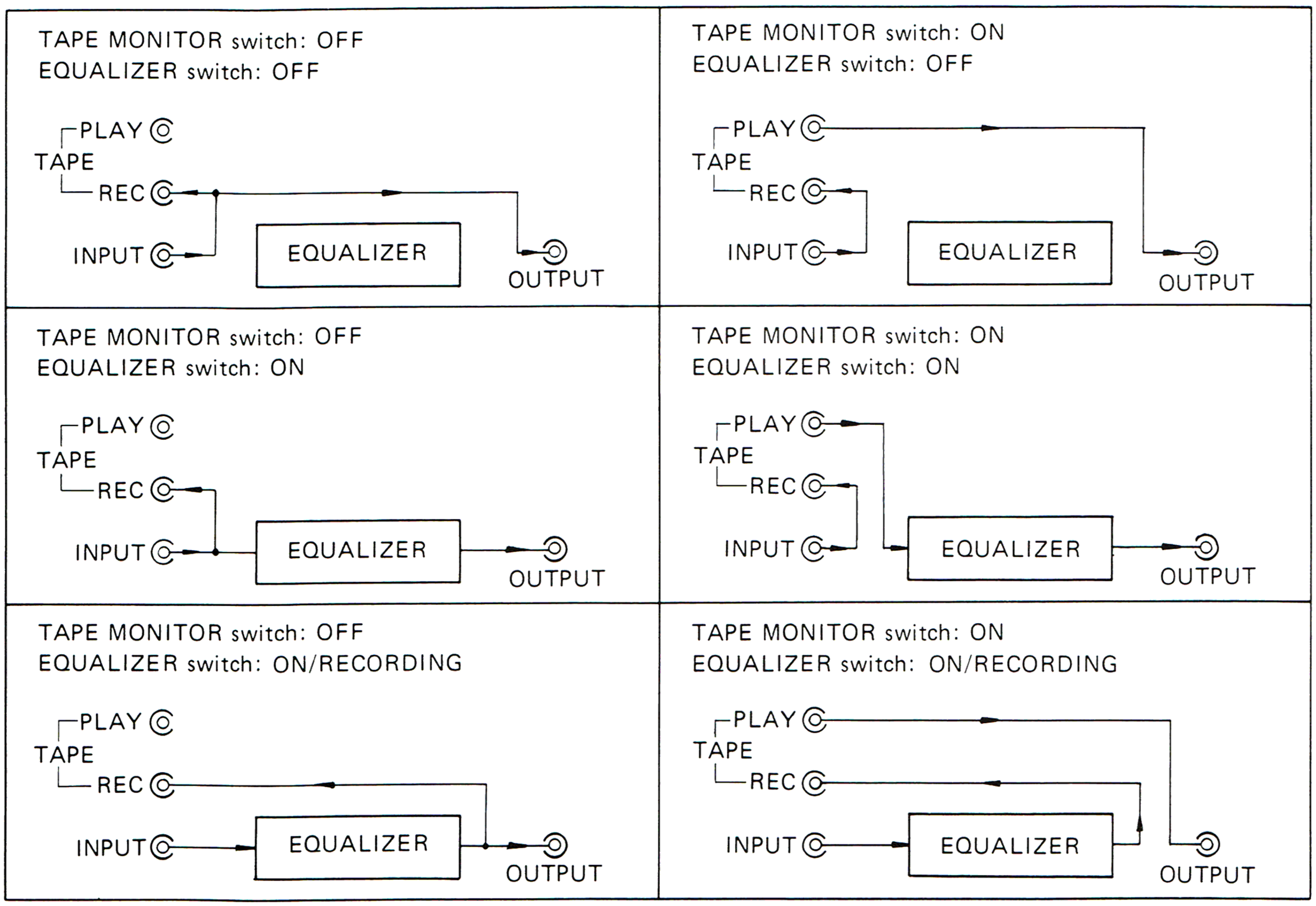

www.hifiengine.com

5. DISASSEMBLY

Top Cover

Remove the two screws (A) on each side of the top cover.

Bottom Plate

Remove the eleven screws (B) to detach the bottom plate.

Front Panel

Remove the all octave control knobs. Remove the four screws (C) from the front panel.

Replacement of the Equalization Characteristics Indicators

1. Pull off the relevant octave control knob, and extract the defective LED (Equalization Characteristics Indicator).
2. Insert a new LED into the octave control shaft, checking the short LED lead faces up.

Note: The short leads of the LEDs employed in this equipment indicate cathode.

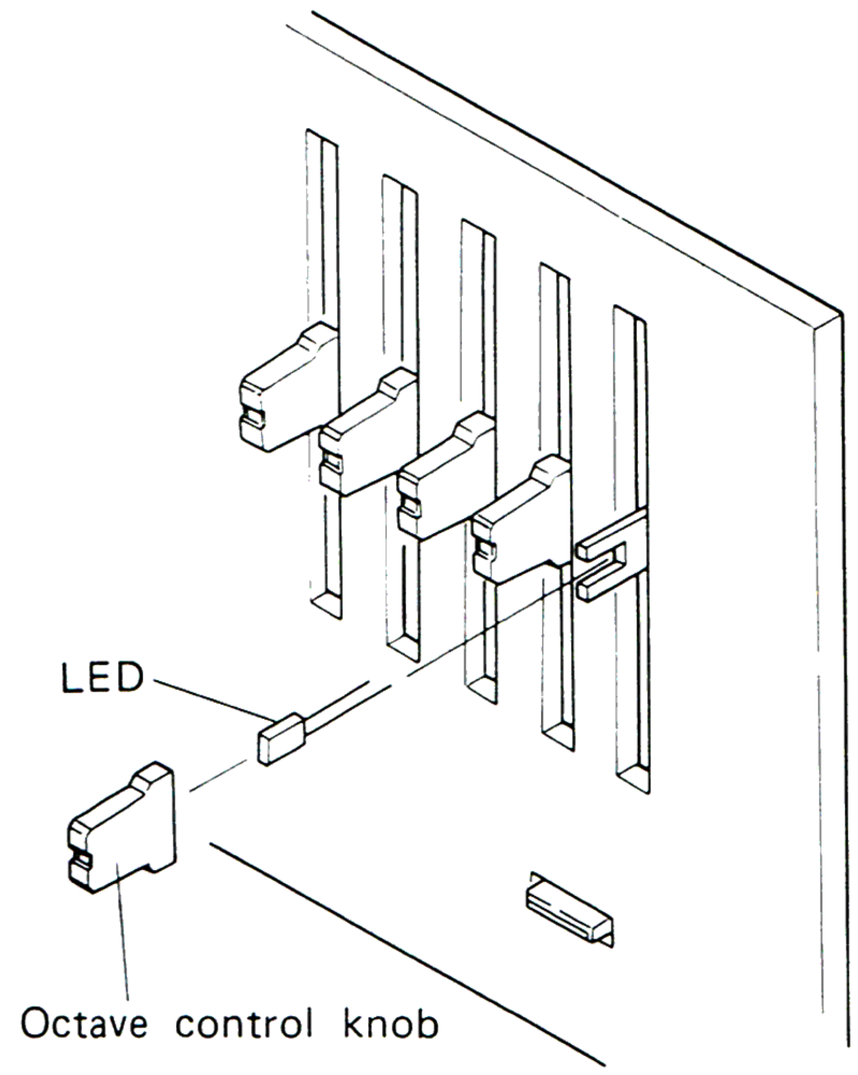

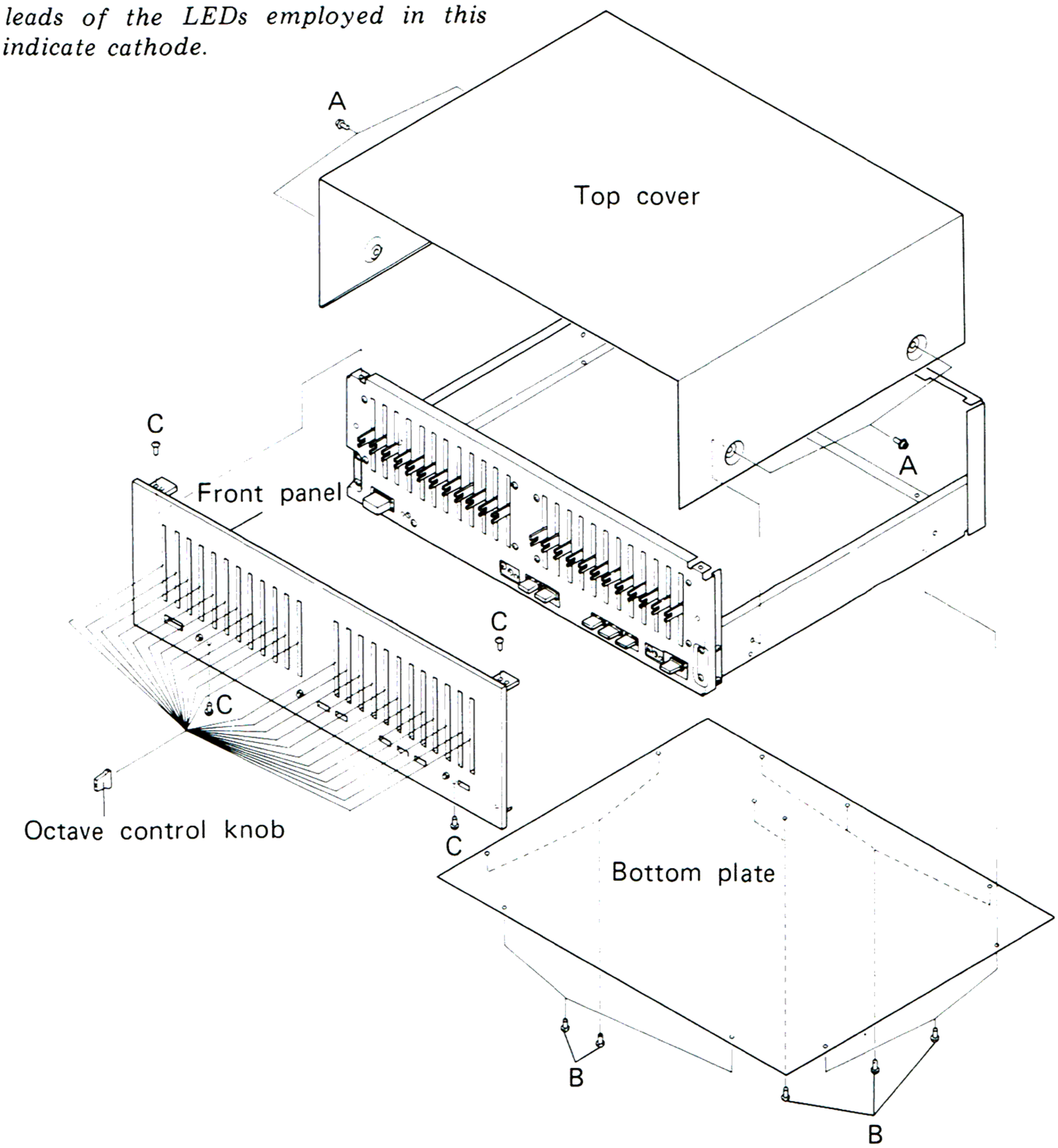

www.hifiengine.com

6. PARTS LOCATIONS

NOTES:

- *The ⚠ mark found on some component parts indicates the importance of the safety factor of the part. Therefore, when replacing, be sure to use parts of identical designation.*
- *For your Parts Stock Control, the fast moving items are indicated with the marks ★★ and ★ .*
  ★★ GENERALLY MOVES FASTER THAN ★
  This classification shall be adjusted by each distributor because it depends on model number, temperature, humidity, etc.

Front Panel View

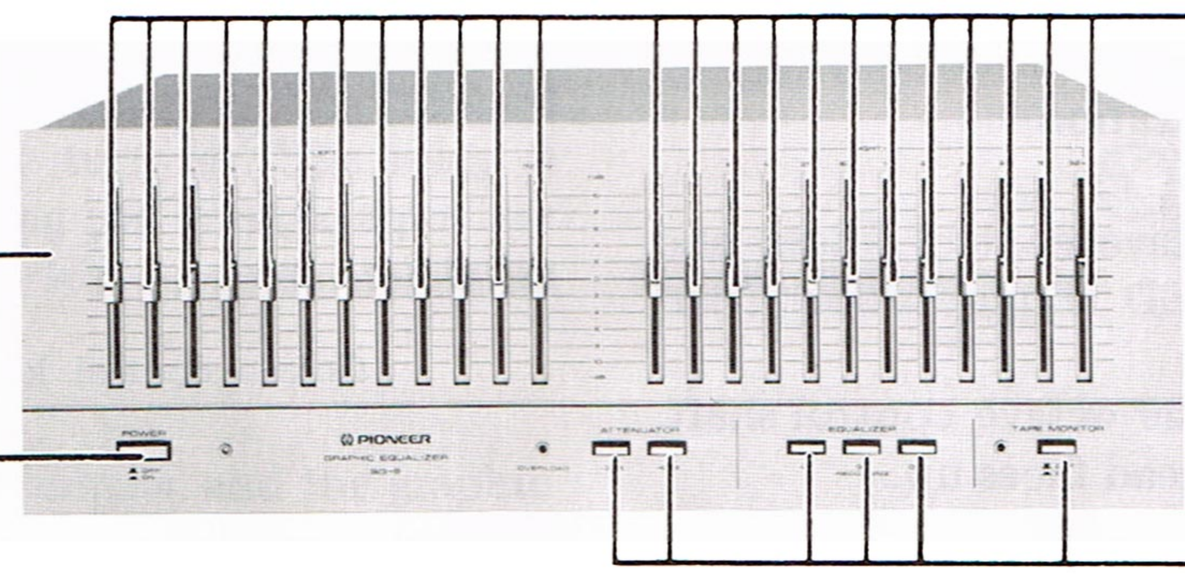

Front View with Panel Removed

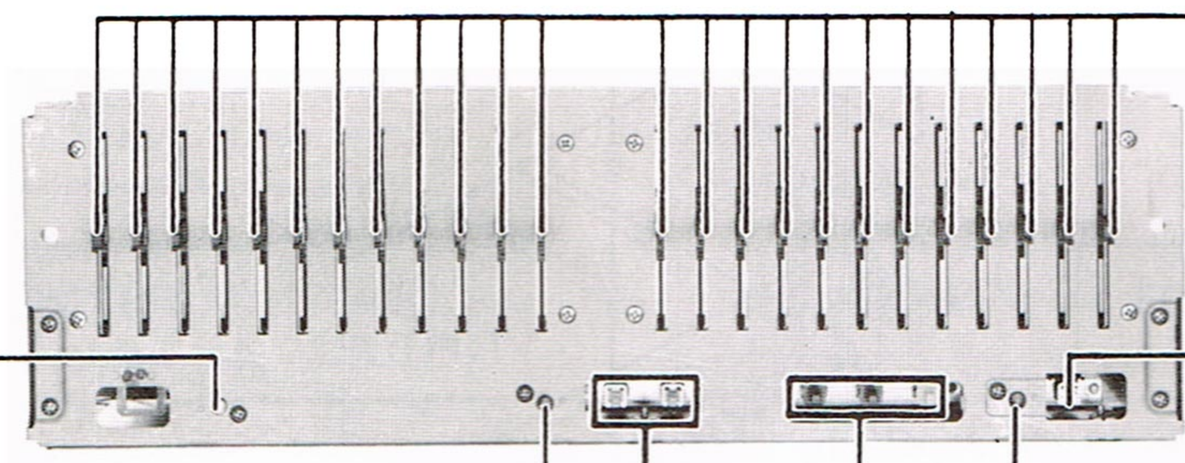

Rear Panel View

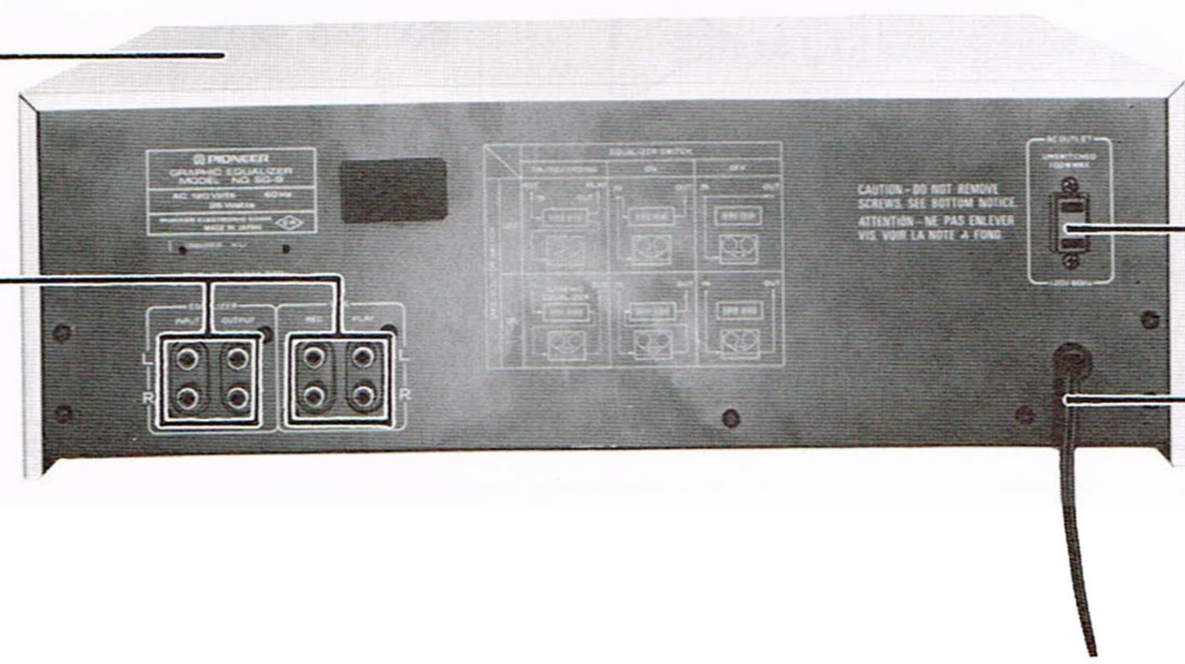

www.hifiengine.com

7. EXPLODED VIEW

NOTES:

- *Parts without part number cannot be supplied.*
- *The ⚠ mark found on some component parts indicates the importance of the safety factor of the part. Therefore, when replacing, be sure to use parts of identical designation.*
- *For your Parts Stock Control, the fast moving items are indicated with the marks ★★ and ★ .*
  ★★ GENERALLY MOVES FASTER THAN ★
  This classification shall be adjusted by each distributor because it depends on model number, temperature, humidity, etc.

Parts List of Exploded View

Mark	No.	Part No.	Description
	1.	FBT40P080FCR	Screw 4×8
	2.	ANE-351	Top cover
	3.	AAD-178	Knob (POWER)
	4.	GWX-298	Volume assembly 1
★	5.	AEL-322	LED
	6.	GWX-299	Volume assembly 2
	7.	VCZ30P060FMC	Screw 3×6
	8.	VBZ30P060FMC	Screw 3×6
	9.	ABA-261	Screw
	10.	ANM-055	Front panel assembly
	11.	AAD-181	Knob (octave control)
	12.	VTZ40P080FMC	Screw 4×8
⚠ ★	13.	ATT-591	Power transformer
⚠	14.	ACG-001	Ceramic capacitor (0.01/AC250V)
⚠ ★★	15.	ASG-521	Push switch (POWER)
	16.	GWM-132	AF amplifier assembly
	17.	AAD-179	Knob (ATTENUATOR, EQUALIZER, TAPE MONITOR)
⚠	18.	AKP-038	AC socket (AC OUTLET)
	19.	MTZ30P100FZK	Screw 3×10
	20.	VCT30P060FZK	Screw 3×6
	21.	AEC-327	Strain relief
⚠	22.	ADG-052	AC power cord
	23.	ABA-115	Screw
	24.	VBZ30P100FZK	Screw 3×10
	25.	AEC-178	Foot assembly
	26.	VTZ40P160FMC	Screw 4×16
	27.	BSZ30P060FMC	Screw 3×6
	101.		Side frame
	102.		Extension bar
	103.		LED assembly 1
	104.		LED assembly 2
	105.		LED assembly 3
	106.		Panel stay
	107.		Frame
	108.		Cushion
	109.		Rear panel
	110.		Bottom plate

Top View

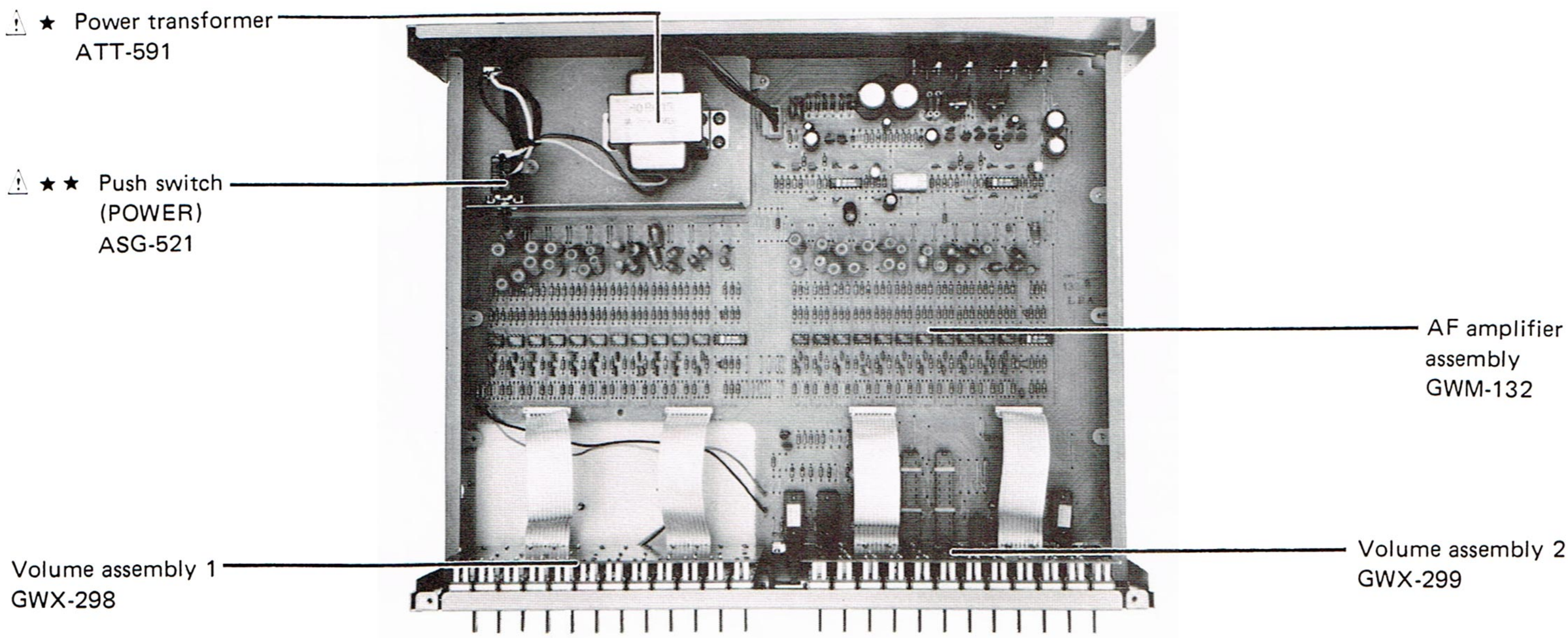

www.hifiengine.com

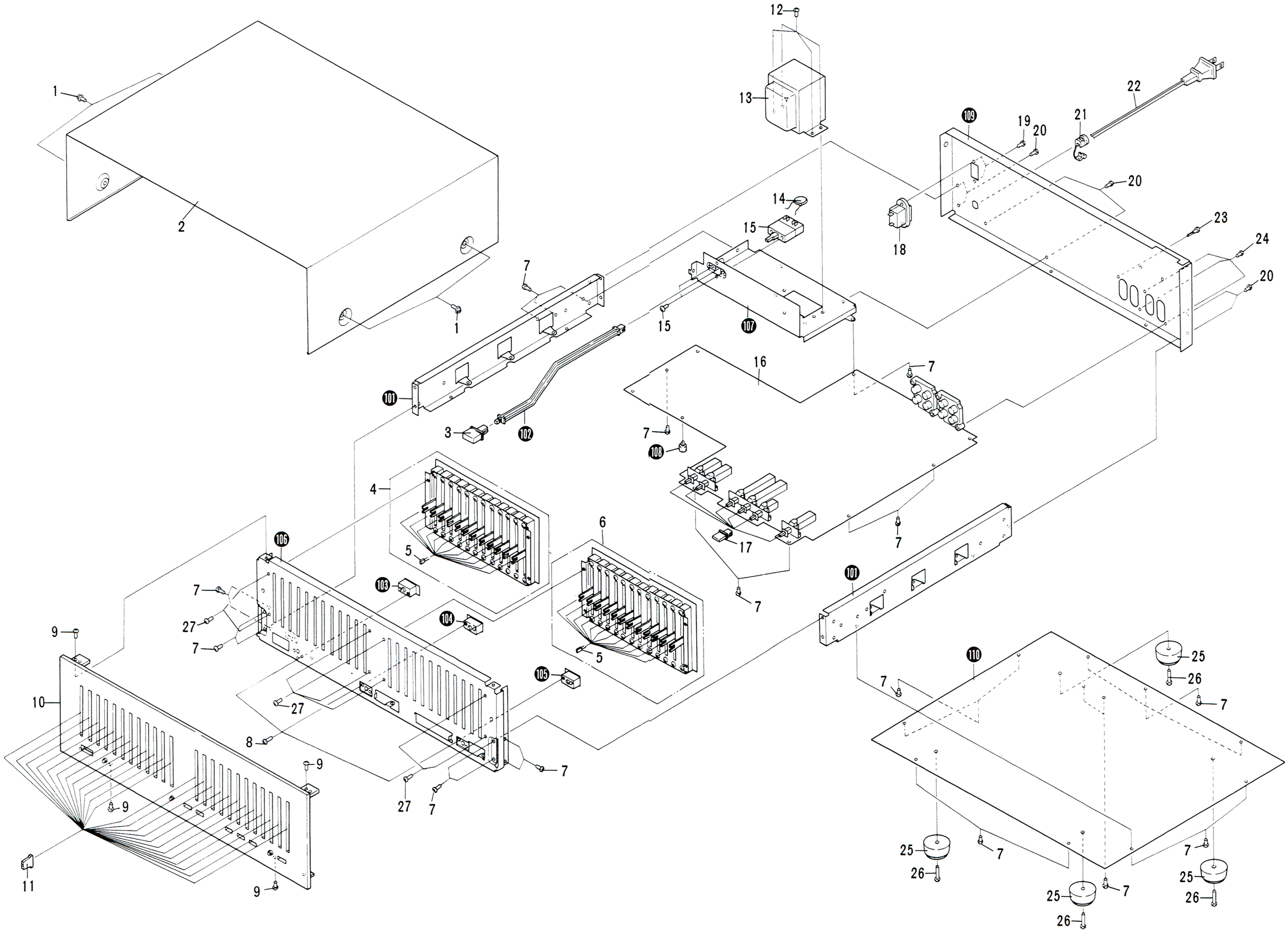

www.hifiengine.com

8. P.C. BOARD CONNECTION DIAGRAM

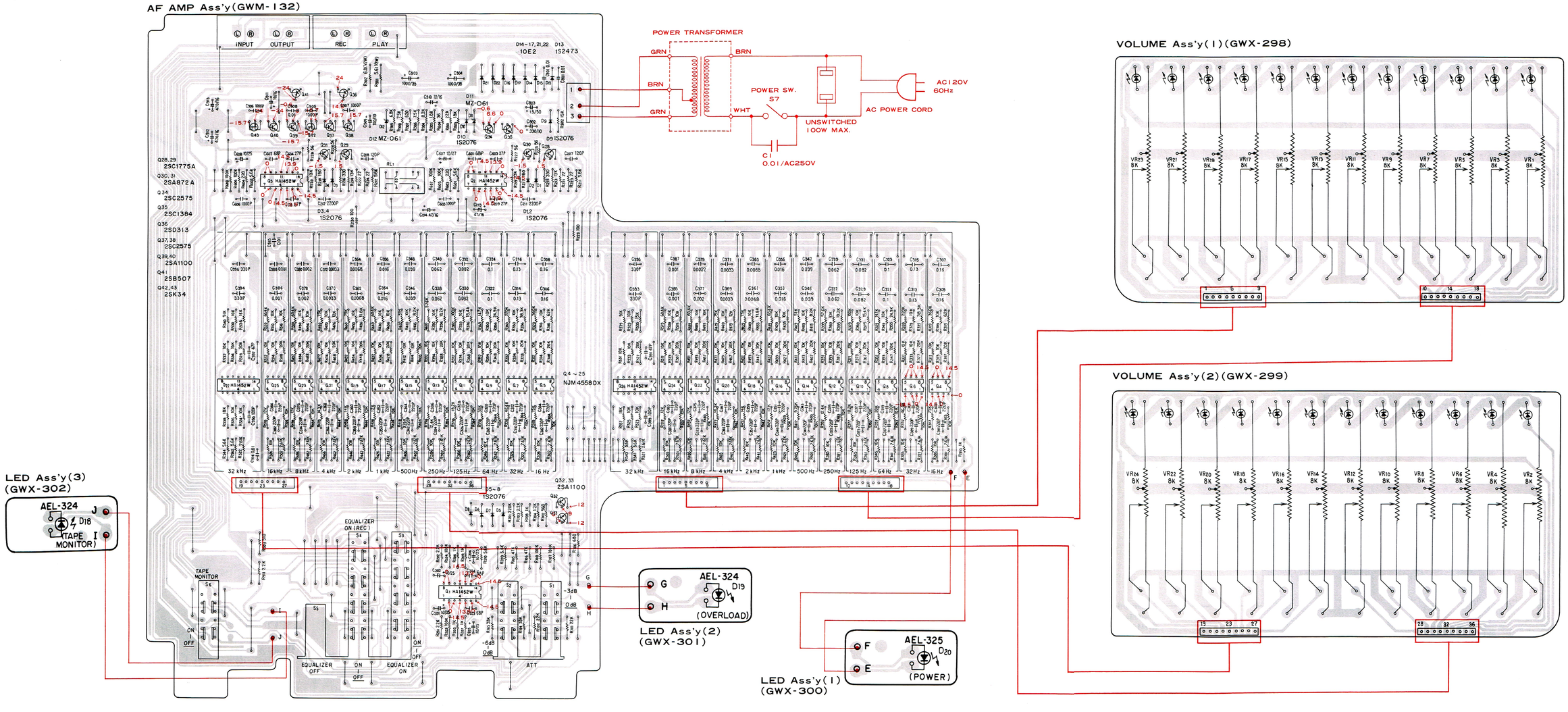

9. SCHEMATIC DIAGRAM

External Appearance of Transistors and ICs

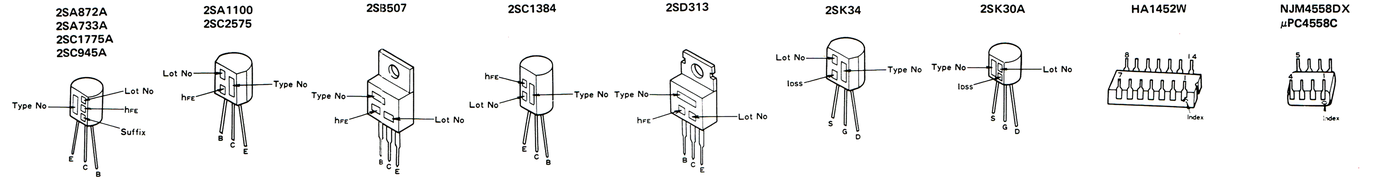

NOTE:
The indicated semiconductors are representative ones only. Other alternative semiconductors may be used and are listed in the parts list.

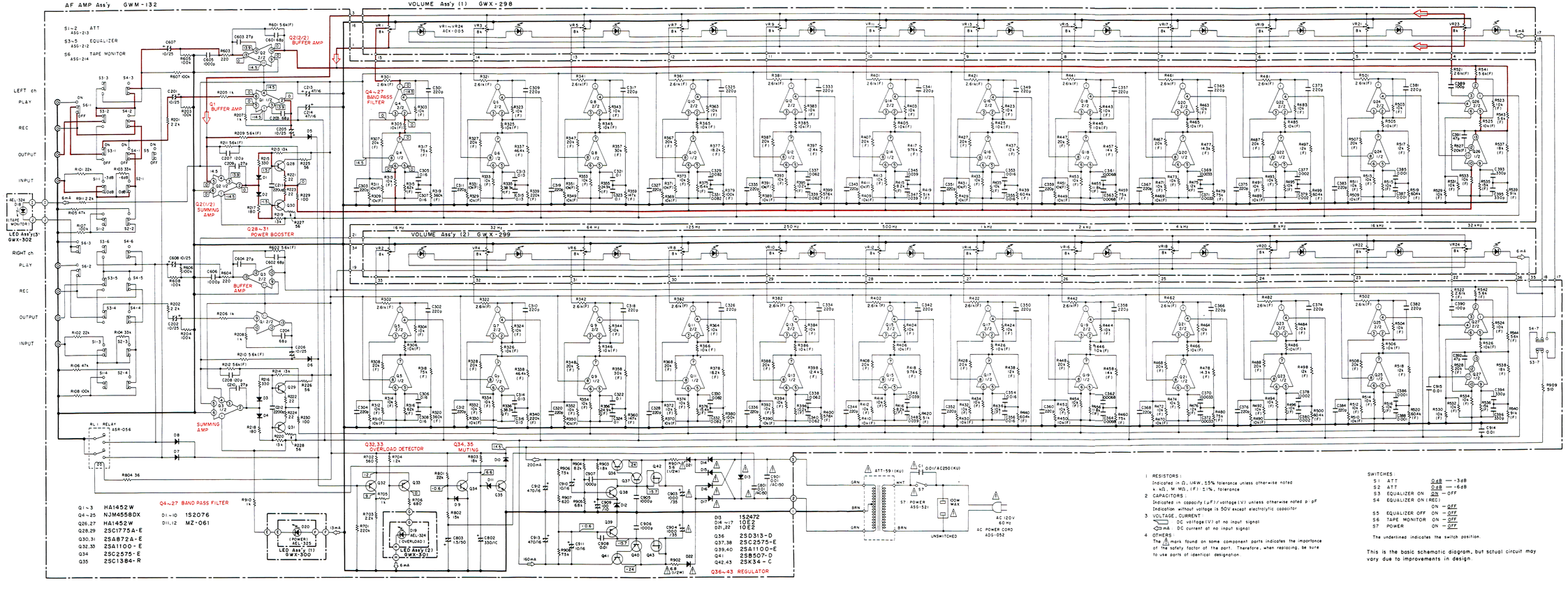

Q1~3 HA1452W
Q4~25 NJM4558DX
Q26,27 HA1452W
Q28,29 2SC1775A-E
Q30,31 2SA872A-E
Q32,33 2SA1100-E
Q34 2SC2575-E
Q35 2SC1384-R

Q4~27 BAND PASS FILTER
D1~10 1S2076
D11,12 MZ-061

D13 1S2472
D14~17 10E2
D21,22 10E2

Q36 2SD313-D
Q37,38 2SC2575-E
Q39,40 2SA1100-E
Q41 2SB507-D
Q42,43 2SK34-C

1. RESISTORS:
Indicated in Ω, 1/4W, ±5% tolerance unless otherwise noted
k: kΩ, M: MΩ, (F): ±1%, tolerance
2. CAPACITORS:
Indicated in capacity (μF)/voltage (V) unless otherwise noted p: pF
Indication without voltage is 50V except electrolytic capacitor
3. VOLTAGE, CURRENT
DC voltage (V) at no input signal
DC current at no input signal
4. OTHERS
The ⚠ mark found on some component parts indicates the importance of the safety factor of the part. Therefore, when replacing, be sure to use parts of identical designation.

SWITCHES:
S1 ATT 0dB — -3dB
S2 ATT 0dB — -6dB
S3 EQUALIZER ON ON — OFF
S4 EQUALIZER ON (REC) ON — OFF
S5 EQUALIZER OFF ON — OFF
S6 TAPE MONITOR ON — OFF
S7 POWER ON — OFF
The underlined indicates the switch position.

This is the basic schematic diagram, but actual circuit may vary due to improvements in design.

10. ELECTRICAL PARTS LIST

NOTES:

- *When ordering resistors, first convert resistance values into code form as shown in the following examples.*

  Ex. 1 When there are 2 effective digits (any digit apart from 0), such as 560 ohm and 47k ohm (tolerance is shown by J=5%, and K=10%).

560Ω	56 × 10^1	561	RD¼PS 5 6 1 J
47kΩ	47 × 10^3	473	RD¼PS 4 7 3 J
0.5Ω	0R5		RN2H 0 R 5 K
1Ω	010		RS1P 0 1 0 K

  Ex. 2 When there are 3 effective digits (such as in high precision metal film resistors).

5.62kΩ	562 × 10^1	5621	RN¼SR 5 6 2 1 F

- *The ⚠ mark found on some component parts indicates the importance of the safety factor of the part. Therefore, when replacing, be sure to use parts of identical designation.*
- *For your Parts Stock Control, the fast moving items are indicated with the marks ★★ and ★ .*

  ★★ GENERALLY MOVES FASTER THAN ★

  This classification shall be adjusted by each distributor because it depends on model number, temperature, humidity, etc.

Miscellaneous Parts

Mark	Part No.	Symbol & Description	
⚠	ACG-001	C1	Ceramic capacitor (0.01/AC 250V)
⚠ ★★	ASG-521	S7	Push switch (POWER)
⚠ ★	ATT-591	T1	Power transformer
⚠	AKP-038		AC socket (AC OUT-LET)
⚠	ADG-052		AC power cord
	GWM-132		AF amplifier assembly
	GWX-298		Volume assembly 1
	GWX-299		Volume assembly 2

AF Amplifier Assembly (GWM-132)

CAPACITORS

Mark	Part No.	Symbol & Description
	CEANL 100M 25	C201,C202,C205,C206,C607,C608
	CEA 470P 16	C213,C214
	CEA 331P 10	C802
⚠	CEA 102P 35	C903,C904
	CEA 101P 10	C909
	CEA 100P 16	C910,C911
	CEA 471P 16	C912,C913
	CEA 1R5M 50L	C803
	CCDSL 270J 50	C209,C210,C603,C604
	CCDSL 470K 50	C391,C392
	CCDSL 680K 50	C203,C204,C601,C602
	CCDSL 101K 50	C389,C390
	CCDSL 121K 50	C207,C208
	CCDSL 221K 50	C301–C304, C309–C312, C317–C320, C325–C328, C333–C336, C341–C344, C349–C352, C357–C360, C365–C368, C373–C376, C381–C384
	CKDYF 102Z 50	C905–C907
	CKDYF 103Z 50	C908,C914,C915
⚠	ACG-004	C801,C901 Ceramic (0.01/AC150V)
	CQMA 102J 50	C605,C606
	CQMA 222J 50	C221,C212
	CQPA 164G 50	C305–C308
	CQPA 134G 50	C313–C316
	CQPA 104G 50	C312–C324
	CQPA 823G 50	C329–C332
	CQPA 623G 50	C337–C340
	CQPA 393G 50	C345–C348
	CQPA 163G 50	C353–C356
	CQSH 682G 50	C361–C364
	CQSH 332G 50	C369–C372
	CQSH 202G 50	C377–C380
	CQSH 102G 50	C385–C388
	CQSH 331G 50	C393–C396

RESISTORS

NOTE: When ordering resistors, convert the resistance value into code form, and then rewrite the part no. as before.

Mark	Part No.	Symbol & Description
	RD¼PM□□□J	R101–R108, R201–R208, R213–R230, R603–R608, R701–R706, R801–R804, R903–R911
	RN¼PQ□□□□F	R209–R212, R301–R544, R601, R602
⚠	RD½PSF□□□J	R901,R902

www.hifiengine.com

SEMICONDUCTORS

Mark	Part No.	Symbol & Description
★★	HA1452W	Q1–Q3, Q26, Q27
★★	μPC4558C-P (NJM4558DX)	Q4–Q25
★★	2SC1775A	Q28,Q29
★★	2SA872A	Q30,Q31
★★	2SA1100-F (2SA733A-P)	Q32,Q33
★★	2SC2575-E (2SC945A)	Q34,Q37,Q38
★★	2SC1384	Q35
★★	2SD313	Q36
★★	2SA1100 (2SA733A)	Q39,Q40
★★	2SB507	Q41
★★	2SK34 (2SK30A)	Q42,Q43
★	1S2076 (1S1555)	D1–D10
★	MZ-061 (WZ-061)	D11,D12
⚠ ★	10E2 (SIB01–02)	D14–D17,D21,D22
★	1S2472	D13

SWITCHES

Mark	Part No.	Symbol & Description	
★★	ASG-213	S1,S2	Dual Push (ATTENUATOR)
★★	ASG-212	S3,S4,S5	3-gang push (EQUALIZER)
★★	ASG-214	S6	Push (TAPE MONITOR)

OTHERS

Mark	Part No.	Symbol & Description	
	AKB-063		Terminal (TAPE, OUTPUT,INPUT)
	ABA-026		Screw 3 × 6
★★	ASR-056	RL1	Relay

Volume Assembly 1 (GWX-298)

Mark	Part No.	Symbol & Description	
★	ACX-005	VR1, VR3, VR5, VR7, VR9, VR11, VR13, VR15, VR17, VR19, VR21, VR23	Variable resistor (with LED)
	ABA-025		Screw 3×4

Volume Assembly 2 (GWX-299)

Mark	Part No.	Symbol & Description	
★	ACX-005	VR2,VR4,VR6,VR8,VR10,VR12, VR14,VR16,VR18,VR20,VR22, VR24	Variable resisror (with LED)
	ABA-025		Screw 3×6

LED Assembly 1

Mark	Part No.	Symbol & Description	
★	AEL-325	D20	LED
	ABA-065		Screw 3×6

LED Assembly 2

Mark	Part No.	Symbol & Description	
★	AEL-324	D19	LED
	ABA-065		Screw 3×6

LED Assembly 3

Mark	Part No.	Symbol & Description	
★	AEL-324	D18	LED
	ABA-065		Screw 3×6

www.hifiengine.com

11. PACKING

Mark	No.	Part No.	Description
	1.	AHA-295	Side pad
	2.	ARB-428	Operating instructions (English)
	3.	ADE-005	Connection cord
	4.	AHD-941	Packing case

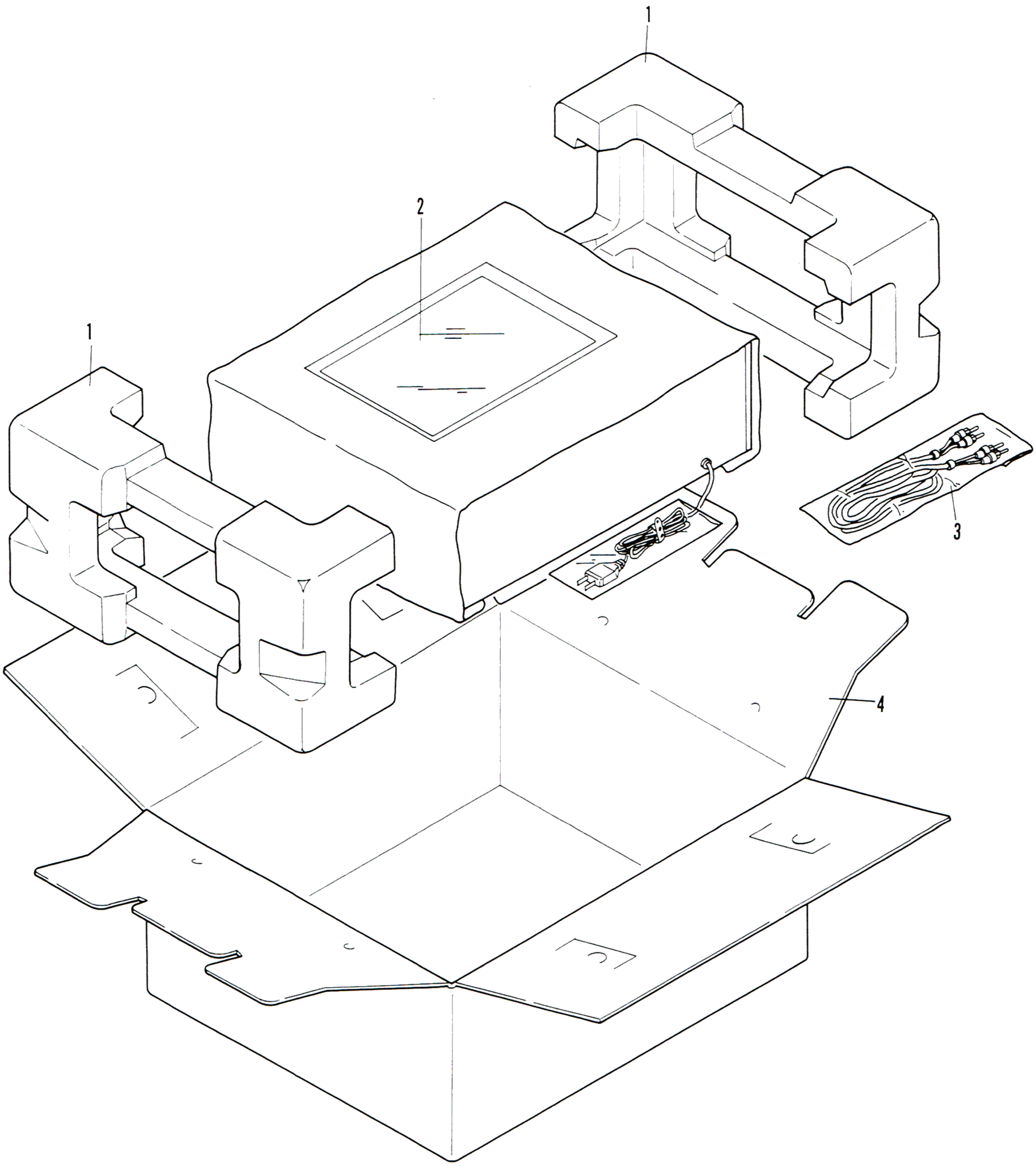

www.hifiengine.com

ADDITIONAL

Service Manual

PIONEER

GRAPHIC EQUALIZER

SG-9

KC
R
R/G

This additional service manual is applicable to the KC type (Canada model), R type (General export model) and R/G type (U.S. Military model). The basic performance of the KC,R and R/G types is the same as the KU type (U.S.A. model), please refer to the KU type service manual (pp. 1–20) with exception of this supplements.

1. SPECIFICATIONS

The specifications for KC, R and R/G types are the same as the KU type except for following sections;

Miscellaneous

Power Requirements
KC type 120V, 60Hz
R type ..... 110V—120V and 220V—240V (switchable) 50/60Hz
R/G type ..... 110V—120V and 220V—240V (switchable) 50/60Hz

Power Consumption
KC type ..... 30VA (CSA)
R type 25W
R/G type 25W

www.hifiengine.com

2. CONTRAST OF MISCELLANEOUS PARTS

NOTES:

- *Parts without part number cannot be supplied.*
- *The ⚠ mark found on some component parts indicates the importance of the safety factor of the part. Therefore, when replacing, be sure to use parts of identical designation.*
- *For your Parts Stock Control, the fast moving items are indicated with the marks ★★ and ★ .*
  ★★ GENERALLY MOVES FASTER THAN ★
  This classification shall be adjusted by each distributor because it depends on model number, temperature, humidity, etc.

ELECTRICAL PARTS

Mark	Symbol & Description		Part No.			
			KU type	KC type	R type	R/G type
⚠ ★	T1	Power transformer (120V)	ATT-591	ATT-597	. . . .	. . . .
⚠ ★	T1	Power transformer (110V–120V,220V–240V)	. . . .	. . . .	ATT-592	ATT-592
⚠	C1	Ceramic capacitor (0.01/AC250V)	ACG-001	. . . .	ACG-001	ACG-001
⚠	C1	Ceramic capacitor (0.01/AC125V)	. . . .	ACG-017	. . . .	. . . .
⚠ ★★	S7	Push switch (POWER)	ASG-521	ASG-521	ASG-520	ASG-520
⚠ ★★	S8	Line voltage selector	. . . .	. . . .	AKX-063	AKX-063
⚠		AC power cord	ADG-052	ADG-052	ADG-046	ADG-046

PACKING AND FURNISHED PARTS

Mark	Symbol & Description	Part No.			
		KU type	KC type	R type	R/G type
	Packing case	AHD-941	AHD-958	AHD-941	AHD-942
	Spacer	. . . .	. . . .	. . . .	AHB-103
	Operating instructions	ARB-428	ARB-428	ARE-019	ARB-433

www.hifiengine.com

3. SCHEMATIC DIAGRAM

NOTE:
The schematic diagrams of the KC, R and R/G types are the same as the KU type, except for following sections;

For KC Type

POWER SUPPLY CIRCUIT

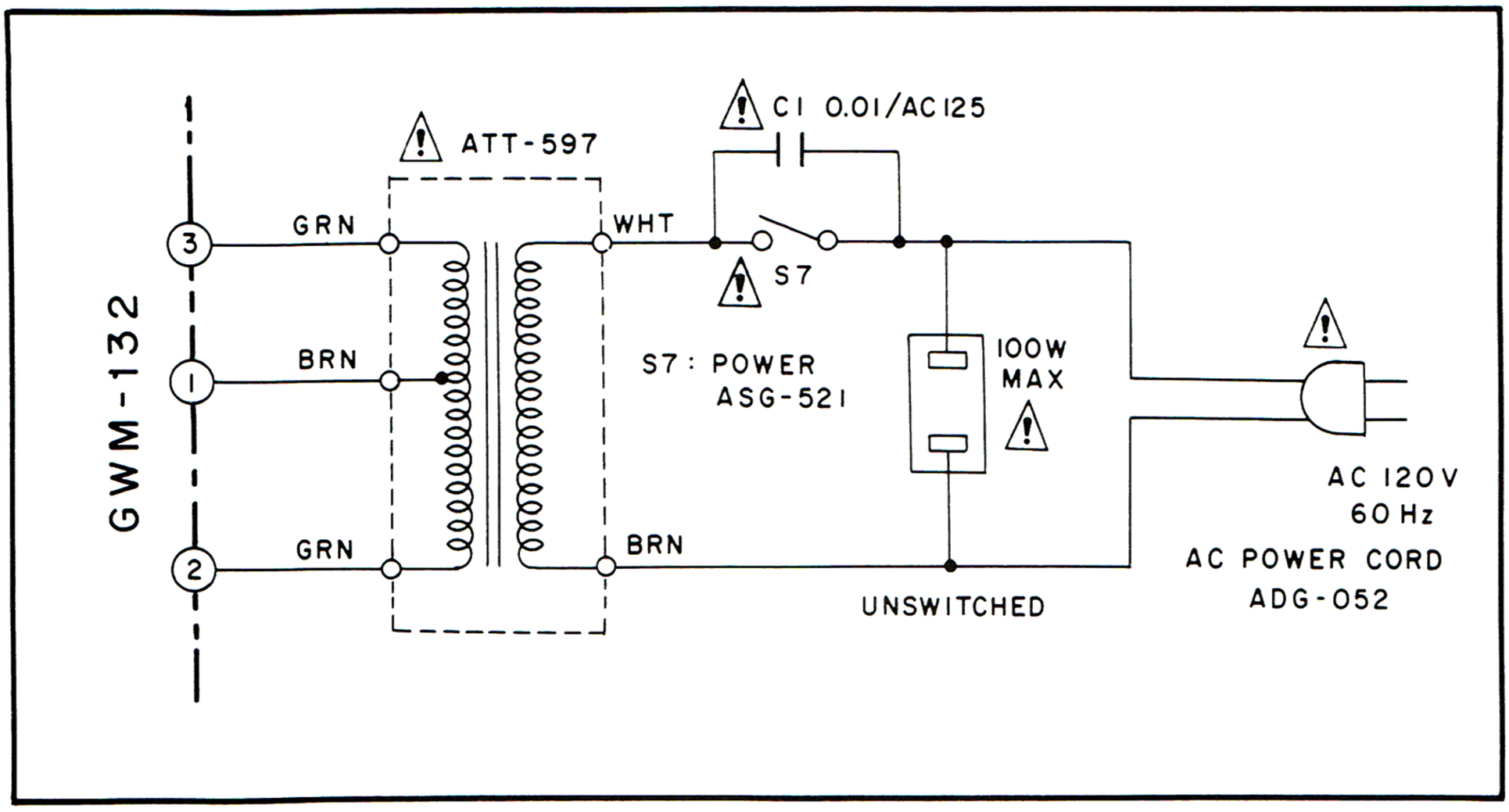

For R, R/G Type

POWER SUPPLY CIRCUIT

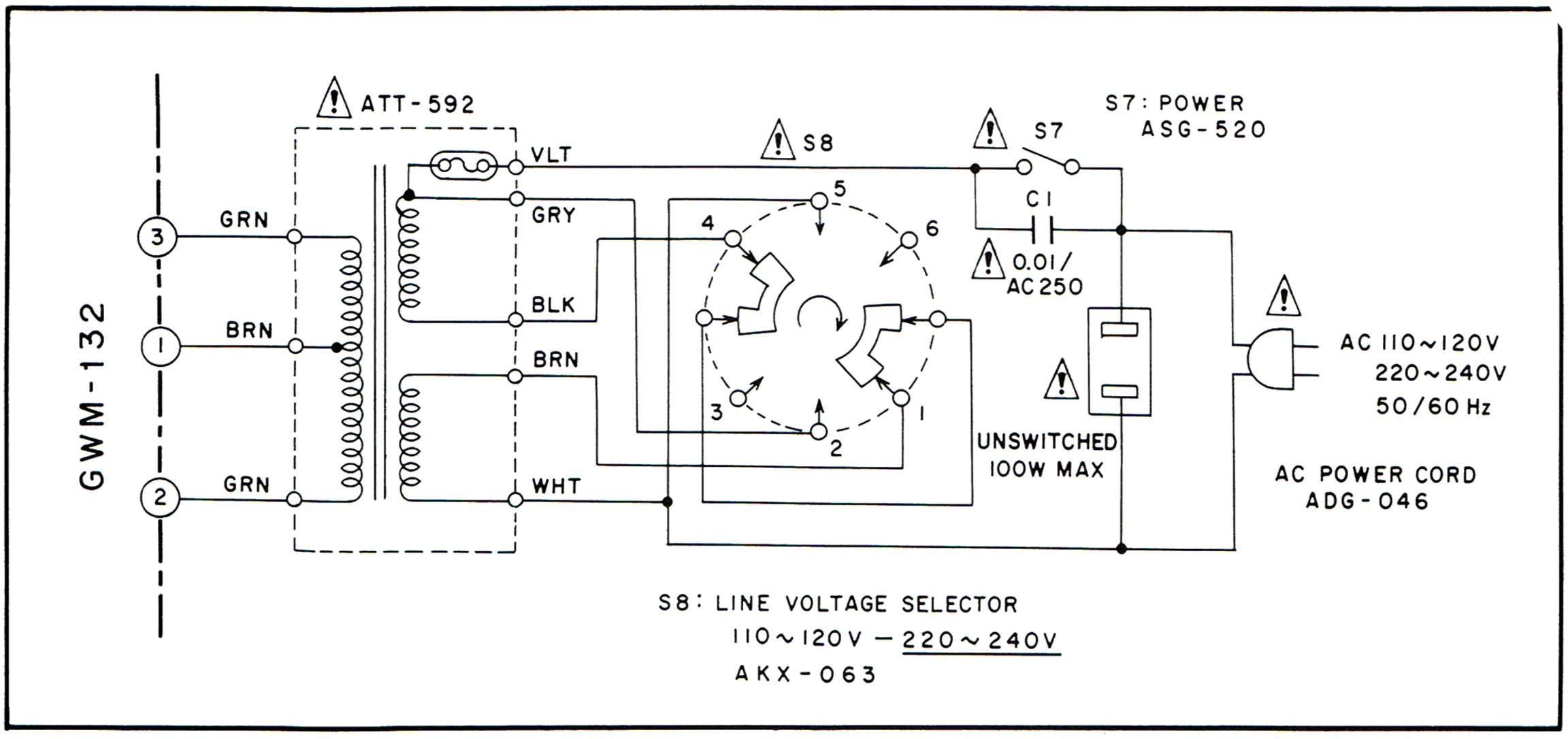

www.hifiengine.com