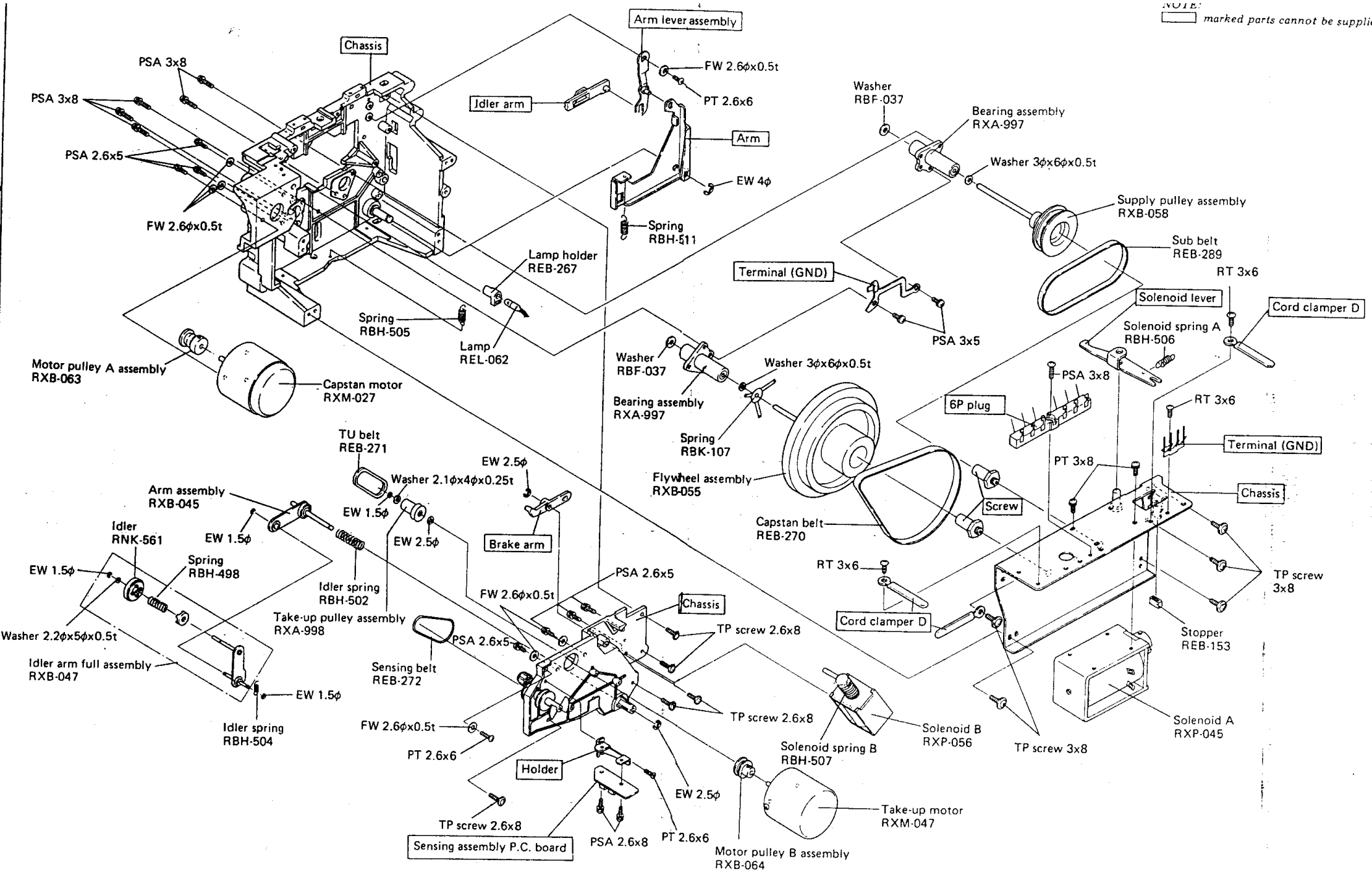NOTE:
[ ] marked parts cannot be suppli