<ART-101-0>

SERVICE MANUAL

STEREO AMPLIFIER

SA-5300

FV, GN

NOTE:

THE MODEL SA-5300 CONES IN TWO VERSIONS DISTINGUISHED AS FOLLOWS:

Round label on rear panel	Voltage	Type
FV	110V, 120V, 130V, 220V, and 240V (switchable)	General export model.
GN	220V only	SEMKO (Sweden), DEMKO (Denmark) NEMKO (Norway) and EI (Finland) approved.

<74L04Y01H>

PIONEER®

www.hifiengine.com

CONTENTS

1. SPECIFICATIONS 3
2. FRONT PANEL FACILITIES 5
3. CONNECTION DIAGRAM 6
4. BLOCK DIAGRAM 7
5. DISASSEMBLY 8
6. PARTS LOCATION 9
7. ALIGNING THE POWER AMPLIFIER 10
8. EXPLODED VIEW AND PARTS LIST 11
9. SCHEMATIC DIAGRAMS, P.C. BOARD PATTERNS AND PARTS LIST
   - 9.1 Circuit Connection Diagram 15
   - 9.2 Electro-Parts 19
   - 9.3 AF Amplifier Assembly (AWK-037) For "FV" Type 20
   - 9.4 AF Amplifier Assembly (AWK-041) For "GN" Type 28
10. PACKING METHOD 36

www.hifiengine.com

1. SPECIFICATIONS

SEMICONDUCTORS

IC 1
Transistors 16
Diodes 8

AMPLIFIER SECTION

10 WATTS* PER CHANNEL, MIN. RMS, AT 8 OHMS FROM 40 HERTZ TO 20,000 HERTZ WITH NO MORE THAN 0.8% TOTAL HARMONIC DISTORTION.

Continuous Power Output
  40Hz ~ 20kHz
  (Both channels driven) . . . . . 10W + 10W (8Ω)
  10W + 10W (4Ω)
  1kHz (Both channels driven) . . . . . 12W + 12W (8Ω)
  14W + 14W (4Ω)
Total Harmonic Distortion (40Hz ~ 20kHz)
  (Continuous Power Output) . . . . . Less than 0.8%
  (1W Power Output, 8Ω) . . . . . Less than 0.3%
Intermodulation Distortion
  (Continuous Power Output) . . . . . Less than 0.8%
  (1W Power Output, 8Ω) . . . . . Less than 0.3%
Power Bandwidth
  (IHF, Both channels driven) . . . . . 15Hz ~ 100kHz (T.H.D. 0.8%)
Output: Speaker . . . . . A, B (4Ω ~ 16Ω)
  A + B (8Ω ~ 16Ω)
  Headphone . . . . . 4Ω ~ 16Ω
Damping Factor
  (40Hz ~ 20kHz, 8Ω) . . . . . More than 30
Input Sensitivity/Impedance
  PHONO 2.5mV/50kΩ
  TUNER 150mV/50kΩ
  AUX 150mV/50kΩ
  TAPE PB 150mV/50kΩ
  TAPE PB (DIN connector) 150mV/50kΩ
PHONO Overload Level
(T.H.D. 0.1%) 150mV
Output Level/Impedance
  TAPE REC 150mV
  TAPE REC (DIN connector) 30mV/80kΩ
Frequency Response
  PHONO (RIAA equalization) . . . . 30Hz ~ 15kHz±0.5dB
  TUNER, AUX, TAPE PB . . . . . 20Hz ~ 30kHz $^{+0.5}_{-1}$dB
Tone Control
  BASS . . . . . +9dB, -8dB (100Hz)
  TREBLE . . . . . +6dB, -6dB (10kHz)
Loudness Contour (Volume control
set at -40dB position) . . . . . +8dB (100Hz), +5dB (10kHz)
Hum & Noise (IHF, Short circuited, A Network)
  PHONO . . . . . More than 70dB
  TUNER, AUX, TAPE PB . . . . . More than 85dB

www.hifiengine.com

MISCELLANEOUS

Power Requirements	220V 50/60Hz or 110, 120, 130, 220and 240V (switchable) 50/60Hz
Power Consumption	85W
Dimensions	350(W) x 125(M) x 282(D)mm 13-3/4 x 4-15/16 x 11-1/8 in.
Weight: Without Package	6.4kg (14 lb 1 oz)
With Package	7.5kg (16 lb 8 oz)

FURNISHED PARTS

Operating Instructions	1	
Fuse 2A	1	5 line voltage model only
Fuse 1A	1	5 line voltage model only

*Measured pursuant to Federal Trade Commission's Trade Regulation rule on Power Output Claims for Amplifiers.

NOTE:

Specifications and the design subject to possible modification without notice due to improvements.

www.hifiengine.com

2. FRONT PANEL FACILITIES

BASS & TREBLE Controls

Tone controls for low and high frequency sounds. Clockwise rotation from center enhances, while counter-clockwise rotation reduces bass or treble.

POWER Switch

Switch for turning AC power ON-OFF.

Pilot Lamp

Lights to indicate power on.

VOLUME Control

Control for adjusting volume from speakers and headphones. Clockwise rotation increases volume.

FUNCTION Switch

Switch for selecting desired program source.

PHONO: To play record on turntable connected to the PHONO jacks

TUNER: To employ tuner connected to the TUNER jacks

AUX: To employ component connected to the AUX jacks

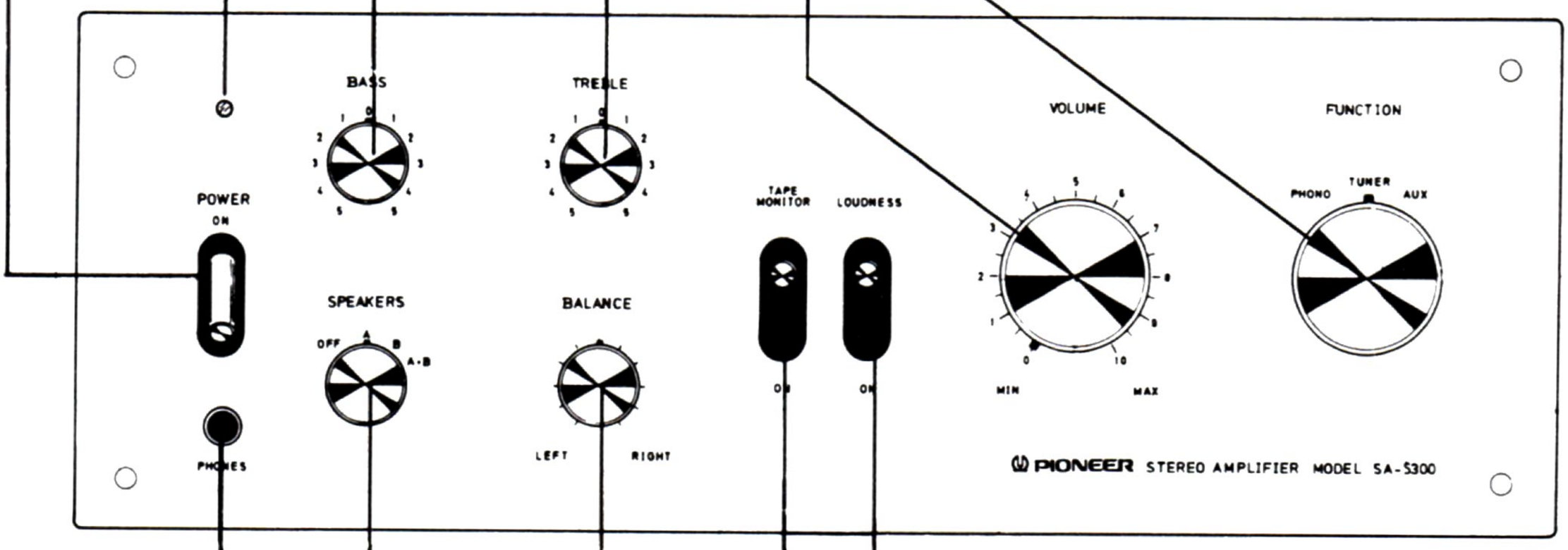

LOUDNESS Switch

Set switch to ON to enhance low and high frequencies when listening at low volume.

The human ear possesses differing response to sound at high and low volume levels. This switch compensates for these characteristics.

PHONES Jack

Stereo headphones can be plugged into this jack for private listening. Set the SPEAKERS switch to OFF when using headphones.

TAPE MONITOR Switch

Set to ON when using a tape deck for tape playback, or when monitoring a tape during recording.

NOTE:
Except for tape playback, keep this switch in the up (OFF) position.

SPEAKERS Switch

Switch for selecting speaker systems

OFF: Cuts off sound from speaker (when using headphones only)

A: Sound obtained from speaker system connected to the A speaker terminals

B: Sound obtained from speaker system connected to the B speaker terminals

A + B: Sound obtained from both A and B speaker systems.

BALANCE Control

Control for adjusting volume balance between left and right speakers and headphones. Clockwise rotation from center increases right channel volume, while counter-clockwise rotation increases left channel volume.

www.hifiengine.com

3. CONNECTION DIAGRAM

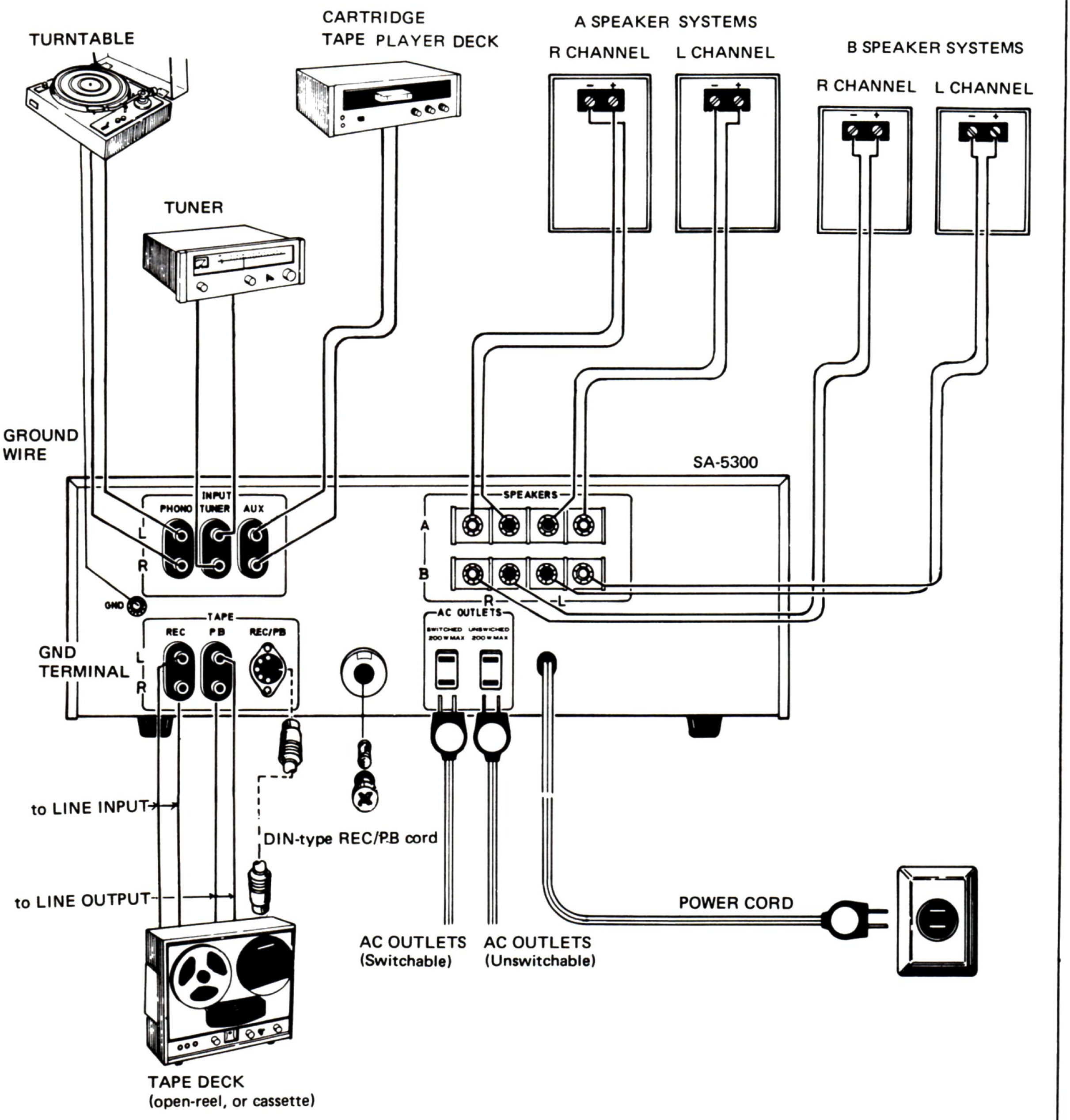

CAUTIONS WHEN CONNECTING

- Observe both the channels and polarities of the inputs and outputs of the components connected to the SA-5300. Be sure to connect L to L, R to R, + to +, and – to –.
- Make all connections securely.
  Loose connections can cause absence of sound or noise.

USING AC CONVENIENCE OUTLETS

These can be used to supply AC power to other components, such as turntable, tape deck, etc.

SWITCHED: AC power to component plugged into this outlet is coupled with the SA-5300 switch setting. Maximum 200W.

UNSWITCHED: AC power always present at this outlet regardless of POWER switch setting. Maximum 200W.

www.hifiengine.com

4. BLOCK DIAGRAM

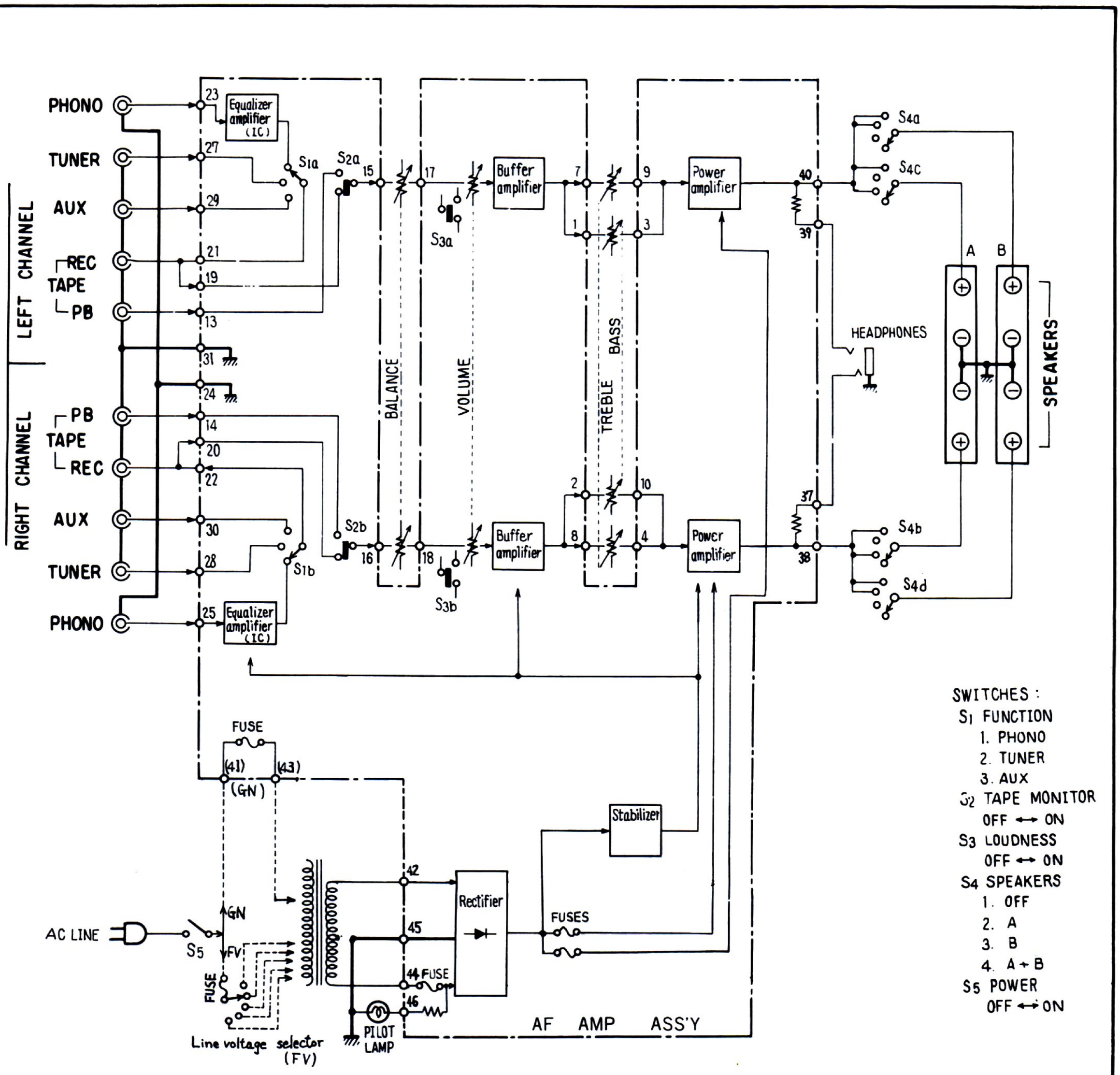

LEVEL DIAGRAM

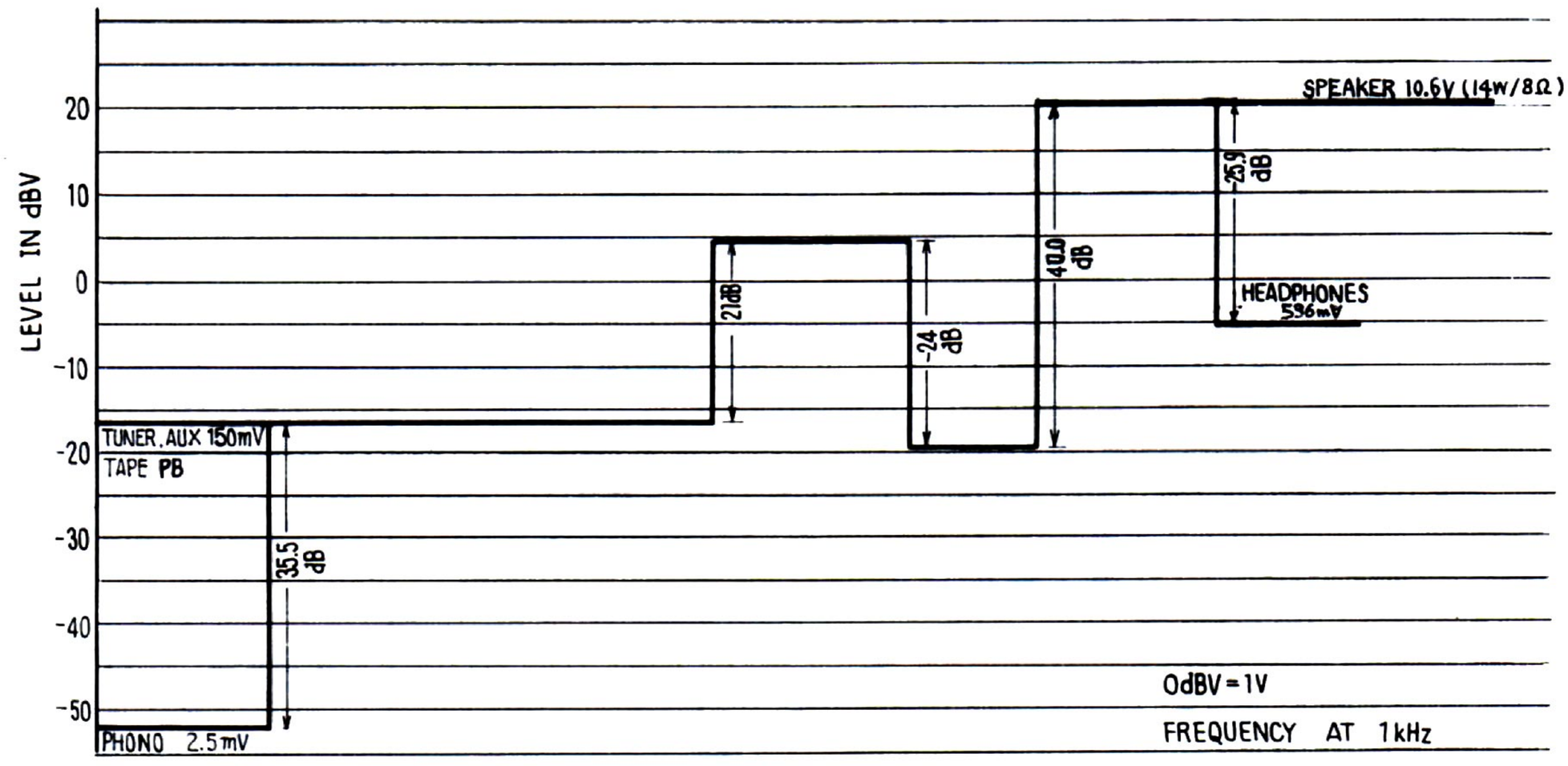

www.hifiengine.com

5. DISASSEMBLY

1. To remove the bonnet case, remove 2 screws each fastening either side and lift the bonnet case.
2. Pull off all the knobs.
3. To remove the front panel, remove 4 screws.
4. To remove the bottom plate, remove a total of 9 screws.

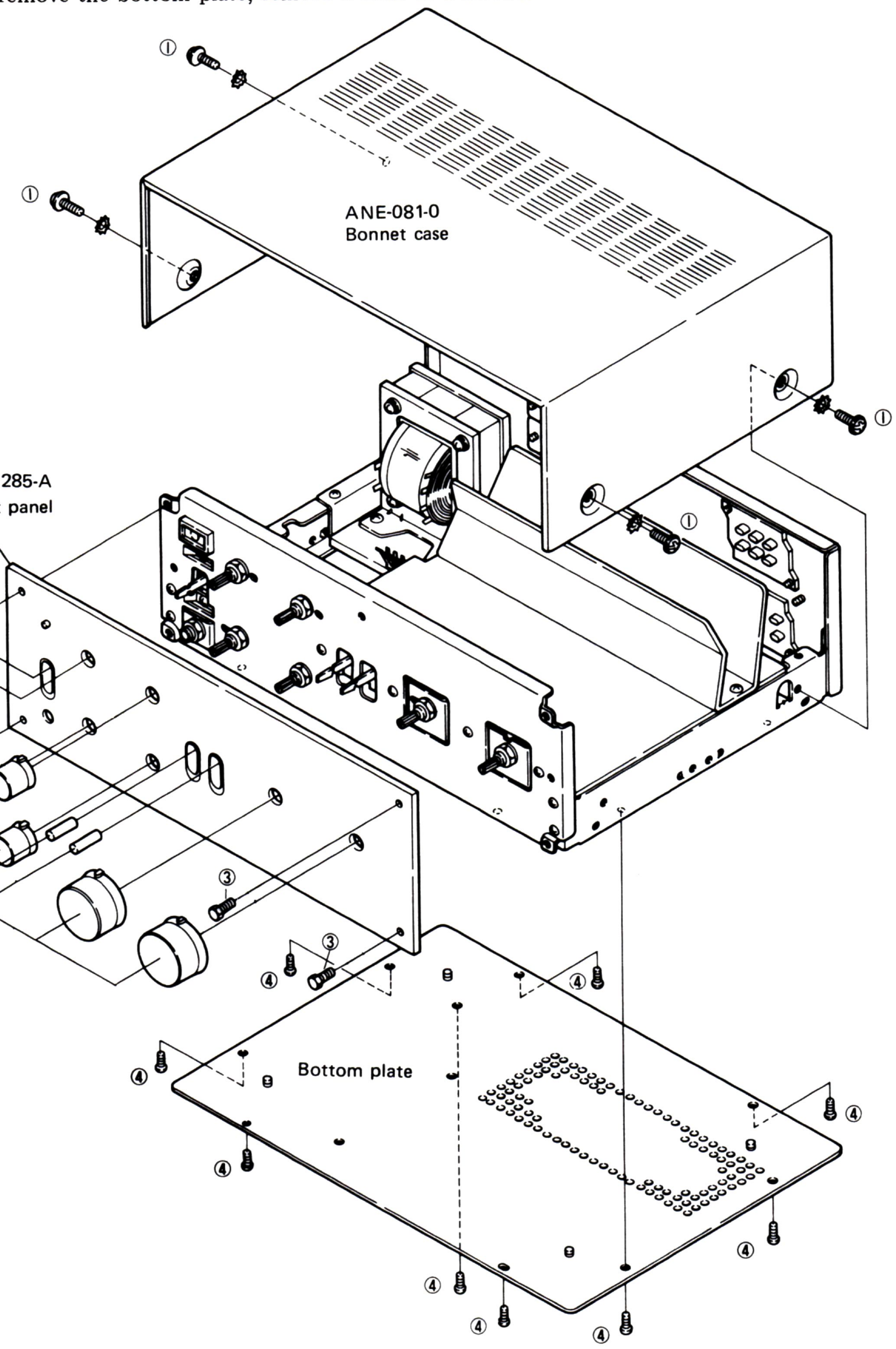

www.hifiengine.com

6. PARTS LOCATION

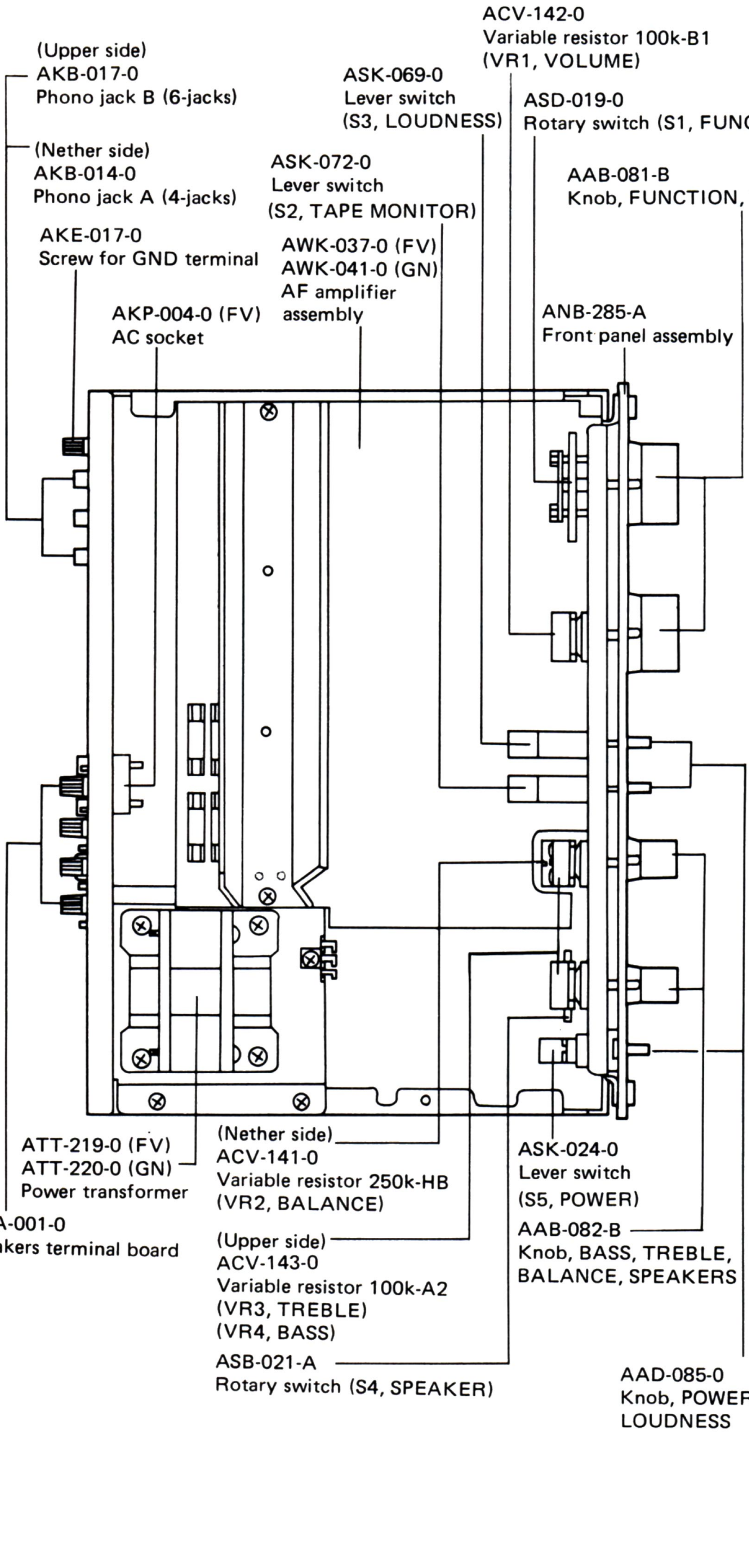

www.hifiengine.com

7. ALIGNING THE POWER AMPLIFIER

- Do this adjustment when any of the transistors in the power amplifier has been replaced.

1. Nothing should be connected to the input jacks of the SA-5300, and an 8Ω dummy load should be connected across the speaker terminals.
2. A DC millivolt meter should be connected across between terminal number TP.1 (left channel, TP.2: for right channel) and chassis.
3. Cut the jumper lead A(B), if the voltage is less than 5mV.

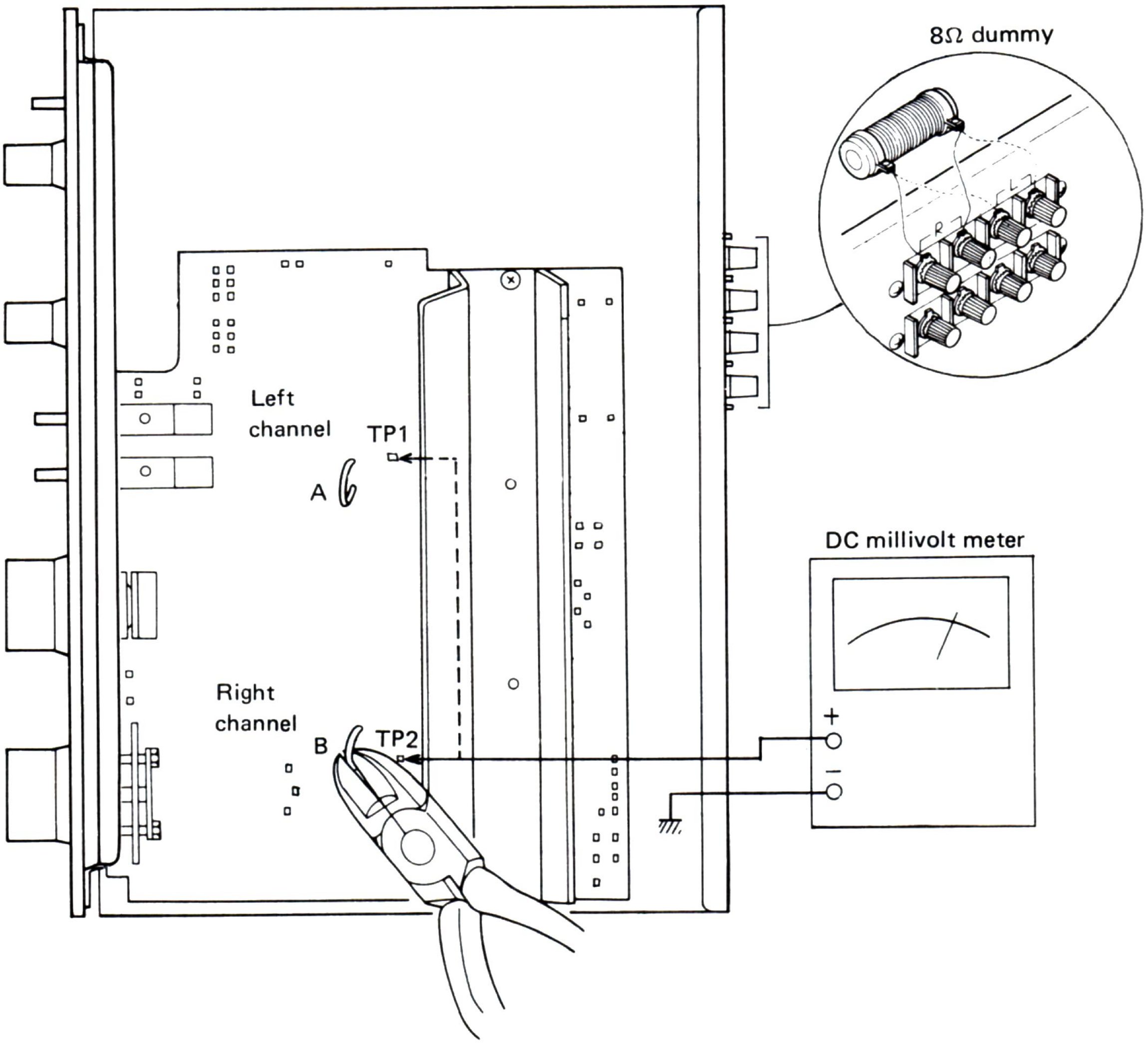

www.hifiengine.com

8. EXPLODED VIEW AND PARTS LIST

NOTE
Parts number is subject to change for the purpose of improvement with notice of a service bulletin.
Service bulletin will be furnished whenever necessary and you are requested to amend parts number in this manual according to the instructions.

Parts List of Exploded View

NOTICE: Any parts asterisked (*) are subject to being not supplied.

Key No.	Description	Part No.	
1	AF amplifier assembly	AWK-037-0	FV
		AWK-041-0	GN
2	Lever switch (S5, POWER)	ASK-024-0	
3*	Panel stay	AND-077-0	
4	Lamp 8V 50mA, with leads (PL 1)	AEL-047-0	
5	Rubber bracket	AEB-064-A	
6	Front panel assembly	ANB-285-A	Including 12
7	Screw, Tapping, 3 x 8	ABA-002-0	
8	Screw, front panel	ABA-021-A	
9	Knob, POWER, TAPE MONITOR, LOUDNESS	AAD-085-0	
10	Knob, BASS, TREBLE, SPEAKERS, BALANCE	AAB-082-B	
11	Knob, VOLUME, FUNCTION	AAB-081-B	
12	Spacer	AEC-166-A	Attached 6
13	Nut (9ϕ)	B71-004-0	
14	Washer (t = 1mm)	M45-086-A	
15	Power transformer (T1)	ATT-219-0	FV
		ATT-220-0	GN
16*	Sub-chassis	ANF-269-A	
17*	Ground terminal 4P	K13-047-0	
18*	Wire clip (B)	AEC-005-0	
19*	Side frame	ANF-270-B	
20	Variable resistor 100k-A2 (VR3, VR4, BASS, TREBLE)	ACV-143-0	
21	Phone jack (PHONES)	K72-026-0	
22	Variable resistor 250k-HB (VR2, BALANCE)	ACV-141-0	
23	Rotary switch (S4, SPEAKERS)	ASB-021-A	
24	Screw, Tapping, 4 x 8	ABA-079-A	
25	Claw washer	B21-011-0	
26	Bonnet case	ANE-081-0	
27*	Rear panel	ANC-129-0	FV
		ANC-154-A	GN
28	AC power cord	ADG-004-0	FV
29	Cord grommet	AEC-079-0	FV
30	REC/PB connector (DIN-type, 5P)	K93-003-B	
31	Screw for GND terminal	AKE-017-0	
32	Speakers terminal board	AKA-001-0	

Continued on the Next Page

www.hifiengine.com

NOTICE: Any parts asterisked (*) are subject to being not supplied.

Key No.	Description	Part No.	
33	AC socket	AKP-004-0	FV
34	Phono jack B (6-jacks)	AKB-017-0	
35	Phono jack A (4-jacks)	AKB-014-0	
36*	Bottom plate	ANE-060-0	
37	Foot	AEC-083-A	
38	Fuse holder (line voltage selector)	AKR-027-0	FV
39	Washer (t = 0.5mm)	ABE-005-0	
40	Connector socket (AC inlet)	AKP-008-0	GN

www.hifiengine.com

9.1 CIRCUIT CONNECTION DIAGRAM

For "FV" type (5 line voltage)

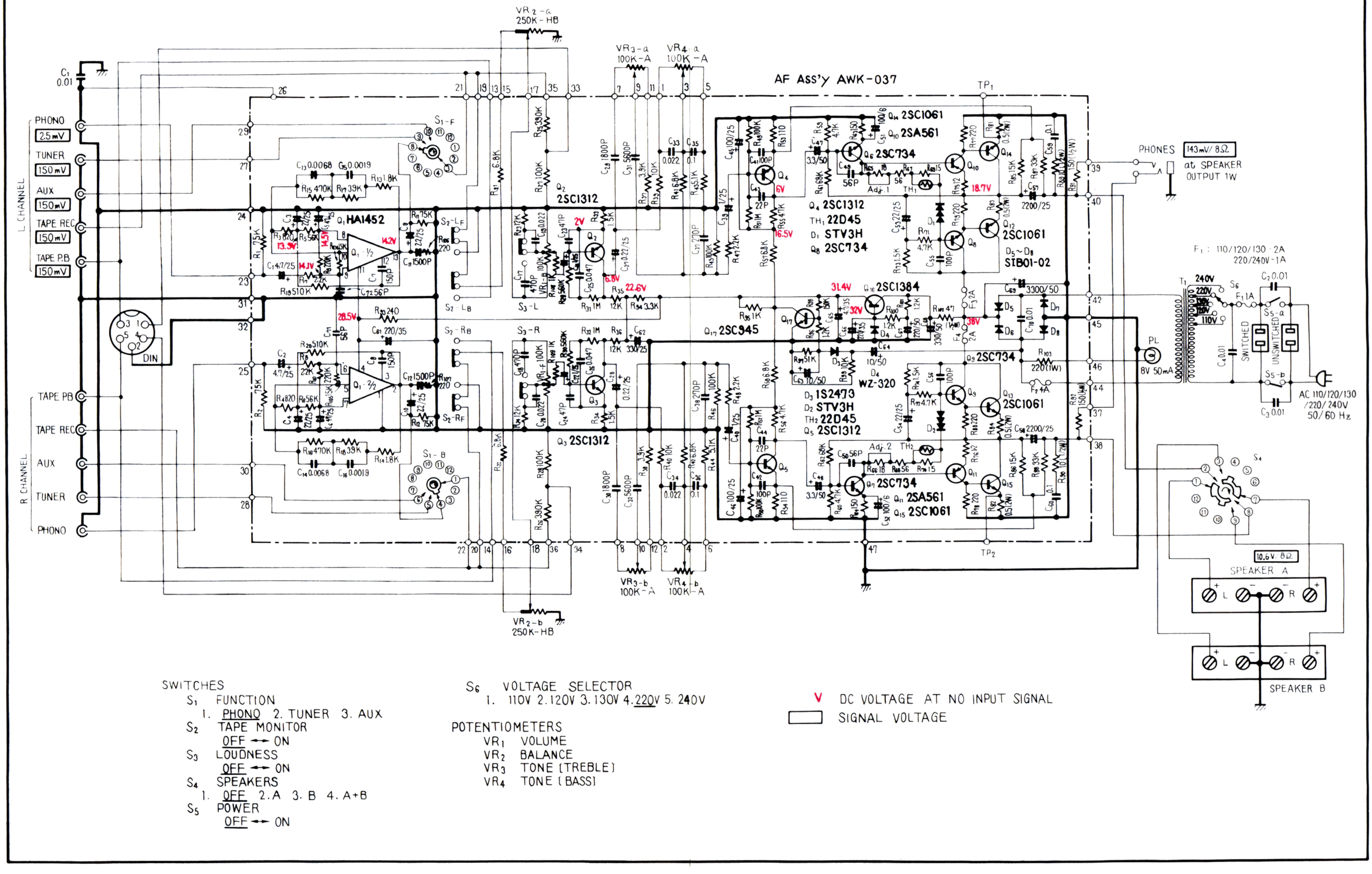

SWITCHES

S_1 FUNCTION
1. PHONO 2. TUNER 3. AUX

S_2 TAPE MONITOR
OFF ⟷ ON

S_3 LOUDNESS
OFF ⟷ ON

S_4 SPEAKERS
1. OFF 2. A 3. B 4. A+B

S_5 POWER
OFF ⟷ ON

S_6 VOLTAGE SELECTOR
1. 110V 2. 120V 3. 130V 4. 220V 5. 240V

POTENTIOMETERS
VR_1 VOLUME
VR_2 BALANCE
VR_3 TONE (TREBLE)
VR_4 TONE (BASS)

V DC VOLTAGE AT NO INPUT SIGNAL
▭ SIGNAL VOLTAGE

NOTE:
The following symbols stand for screws.
P : Pan head machine screw
T_2 : Self- tapping screw 2B (Fig. A)
Tc : Self- tapping screw 3C (Fig. B)

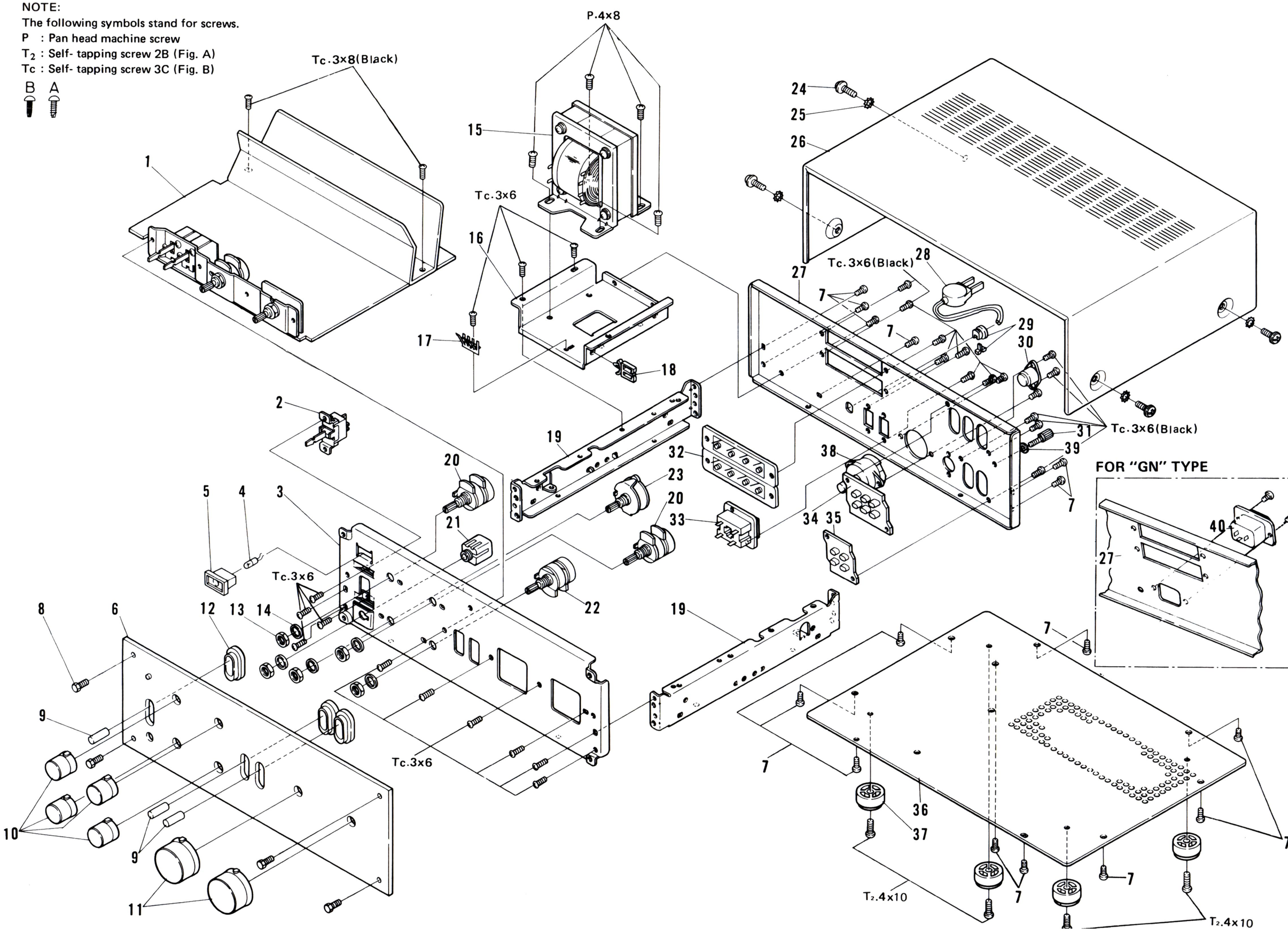

For "GN" type (220V only)

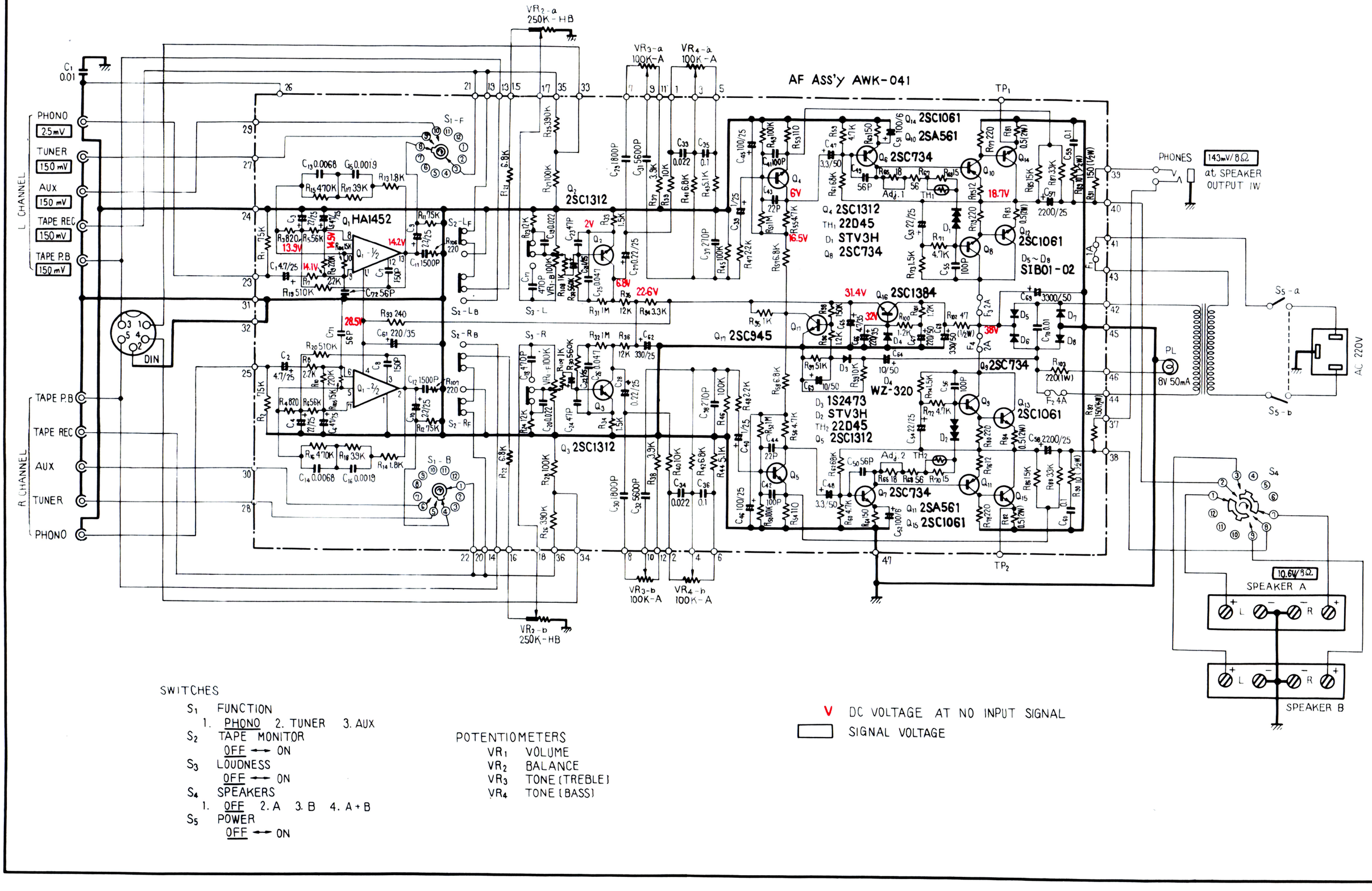

SWITCHES

- S_1 FUNCTION
  1. PHONO 2. TUNER 3. AUX
- S_2 TAPE MONITOR
  OFF ⟷ ON
- S_3 LOUDNESS
  OFF ⟷ ON
- S_4 SPEAKERS
  1. OFF 2. A 3. B 4. A+B
- S_5 POWER
  OFF ⟷ ON

POTENTIOMETERS

- VR_1 VOLUME
- VR_2 BALANCE
- VR_3 TONE (TREBLE)
- VR_4 TONE (BASS)

V DC VOLTAGE AT NO INPUT SIGNAL

▭ SIGNAL VOLTAGE

9.2 ELECTRO-PARTS

- CAPACITORS: IN μF UNLESS OTERWISE NOTED p: pF
- RESISTORS: INΩ, ¼W UNLESS OTHERWISE NOTED k: kΩ, M: MΩ

CAPACITORS

Symbol	Description			Part No.	
C1	Ceramic	0.01	50V	CKDYF 103Z 50	
C2	Ceramic	0.01	250V	ACG-001-0	
C3	Ceramic	0.01	250V	ACG-001-0	
C4	Ceramic	0.01	250V	ACG-001-0	FV

RESISTORS

Symbol	Description	Part No.	
VR2	Variable 250k-HB (BALANCE)	ACV-141-0	
VR3	Variable 100k-A2 (TREBLE)	ACV-143-0	
VR4	Variable 100k-A2 (BASS)	ACV-143-0	

OTHERS

Symbol	Description	Part No.	
T1	Power transformer	ATT-219-0	FV
	Power transformer	ATT-220-0	GN
S4	Rotary switch (SPEAKERS)	ASK-024-0	
S5	Lever switch (POWER)	ASB-021-A	
PL1	Lamp, 8V 50mA, with leads (pilot)	AEL-047-0	
F1	Fuse 1A (primary)	AEK-106-0	FV
	Fuse 1A (primary)	AEK-402-0	GN
F2	Fuse 4A (secondary)	AEK-100-0	FV
	Fuse 4A (secondary)	AEK-400-0	GN
F3, F4	Fuse 2A (power amp)	AEK-103-0	FV
	Fuse 2A (power amp)	AEK-017-0	GN

HA1452

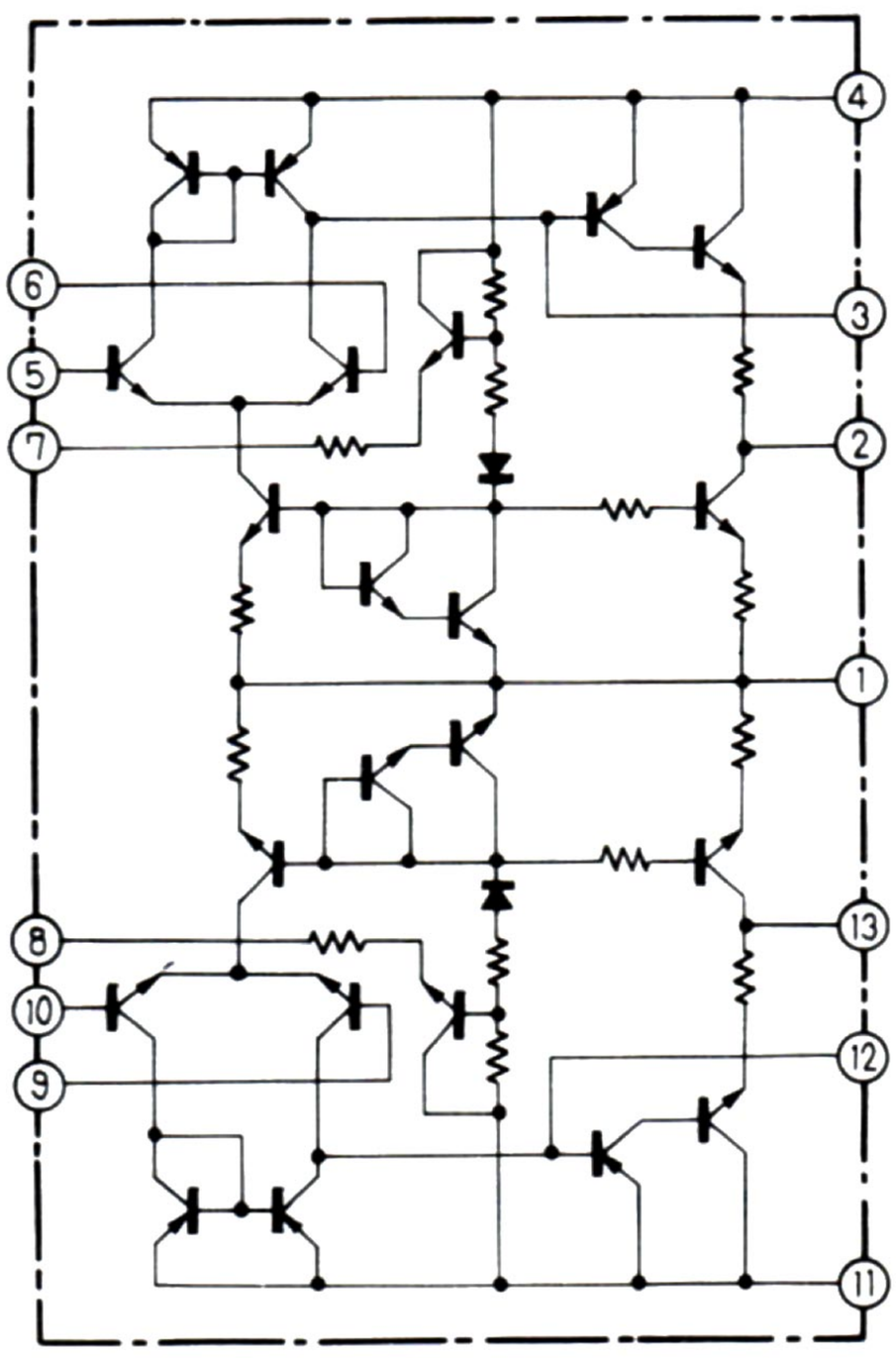

www.hifiengine.com

9.3 AF AMPLIFIER ASSEMBLY (AWK-037-0) FOR "FV" TYPE

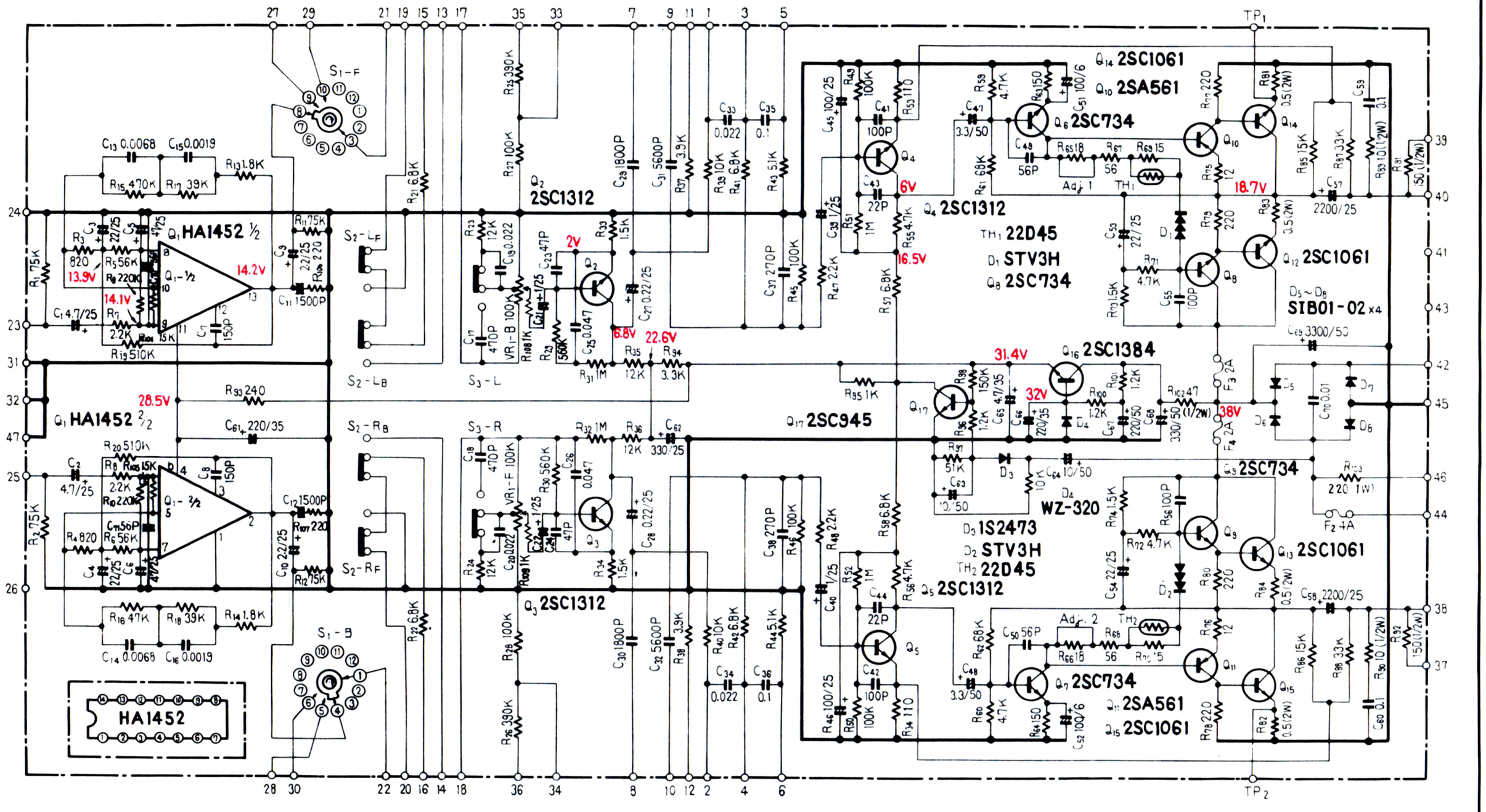

SWITCHES
- S_1 : FUNCTION
- S_2 : TAPE MONITOR
- S_3 : LOUDNESS

VR CONTROL
- VR_1 : VOLUME

Parts List AF Amplifier Assembly (AWK-037-0)

CAPACITORS

Symbol	Description			Part No.	
C1	Electrolytic	4.7	25V	CSZA 4R7K 25	
C2	Electrolytic	4.7	25V	CSZA 4R7K 25	
C3	Electrolytic	22	25V	ACH-045-0	
C4	Electrolytic	22	25V	ACH-045-0	
C5	Electrolytic	47	25V	CEA 470P 25	
C6	Electrolytic	47	25V	CEA 470P 25	
C7	Ceramic	150p	50V	CCDSL 151K 50	
C8	Ceramic	150p	50V	CCDSL 151K 50	
C9	Electrolytic	2.2	25V	CSZA 2R2M 25	
C10	Electrolytic	2.2	25V	CSZA 2R2M 25	
C11	Ceramic	0.0015	50V	CKDYB 152K 50	
C12	Ceramic	0.0015	50V	CKDYB 152K 50	
C13	Styrol	0.0068	50V	CQSA 682J 50	
C14	Styrol	0.0068	50V	CQSA 682J 50	
C15	Styrol	0.0014	50V	CQSA 142J 50	
C16	Styrol	0.0014	50V	CQSA 142J 50	
C17	Ceramic	470p	50V	CKDYB 471K 50	
C18	Ceramic	470p	50V	CKDYB 471K 50	
C19	Ceramic	0.022	50V	CKDYF 223Z 50	
C20	Ceramic	0.022	50V	CKDYF 223Z 50	
C21	Electrolytic	1	25V	CSSA 010M 25	
C22	Electrolytic	1	25V	CSSA 010M 25	
C23	Ceramic	47p	50V	CCDSL 470K 50	
C24	Ceramic	47p	50V	CCDSL 470K 50	
C25	Ceramic	0.047	50V	CKDYF 473Z 50	
C26	Ceramic	0.047	50V	CKDYF 473Z 50	
C27	Electrolytic	0.22	25V	CSSA R22M 25	
C28	Electrolytic	0.22	25V	CSSA R22M 25	
C29	Ceramic	0.0018	50V	CKDYB 182K 50	
C30	Ceramic	0.0018	50V	CKDYB 182K 50	
C31	Ceramic	0.0056	50V	CKDYB 562K 50	
C32	Ceramic	0.0056	50V	CKDYB 562K 50	
C33	Mylar	0.022	50V	CQMA 223J 50	
C34	Mylar	0.022	50V	CQMA 223J 50	
C35	Mylar	0.1	50V	CQMA 104J 50	
C36	Mylar	0.1	50V	CQMA 104J 50	
C37	Ceramic	270p	50V	CCDSL 271K 50	
C38	Ceramic	270p	50V	CCDSL 271K 50	
C39	Electrolytic	1	25V	CSSA 010M 25	
C40	Electrolytic	1	25V	CSSA 010M 25	
C41	Ceramic	100p	50V	CCDSL 101K 50	
C42	Ceramic	100p	50V	CCDSL 101K 50	
C43	Ceramic	22p	50V	CCDSL 220K 50	
C44	Ceramic	22p	50V	CCDSL 220K 50	
C45	Electrolytic	100	25V	CEA 101P 25	

www.hifiengine.com

Foil Side

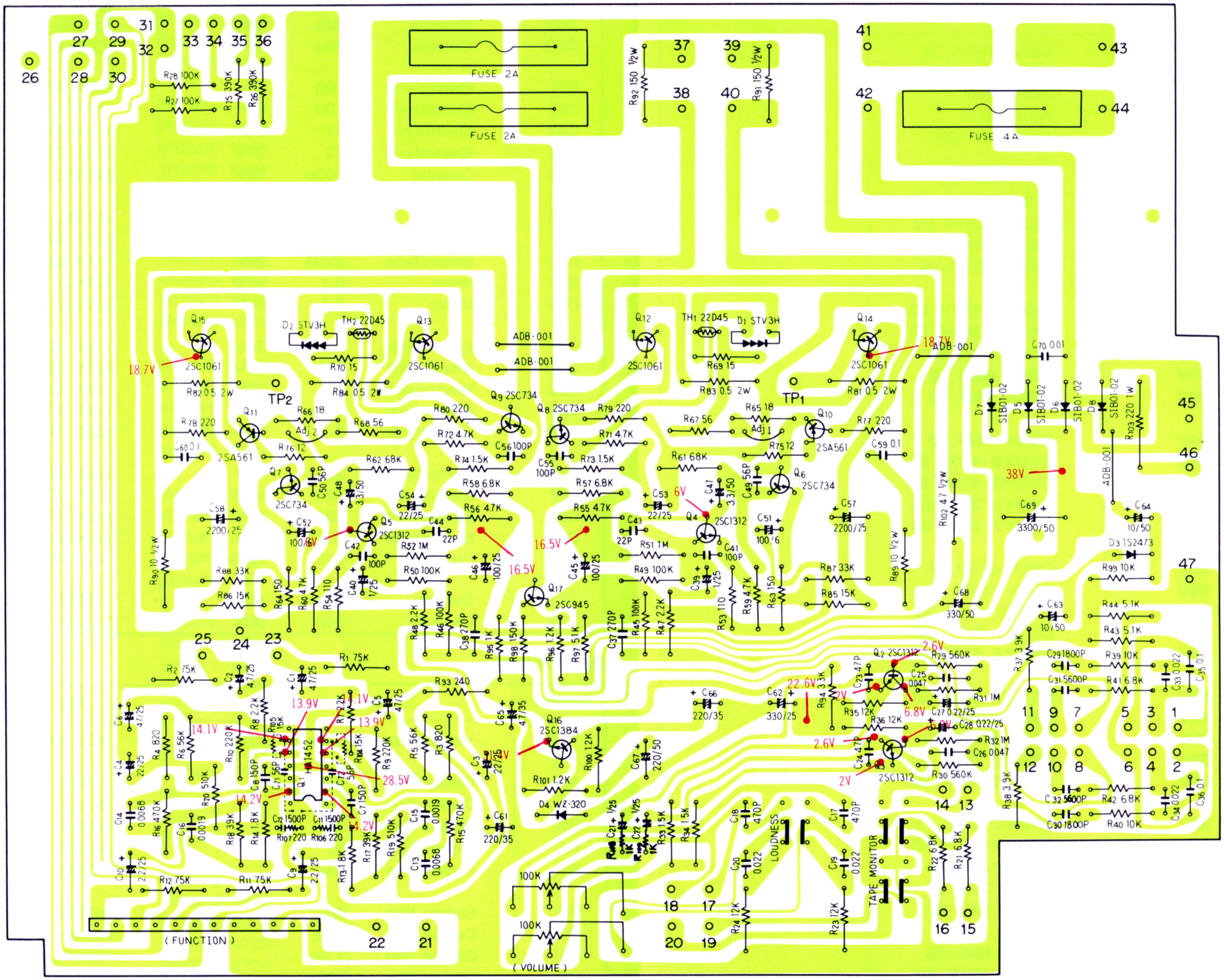

2SA561
2SC734

2SC1312

2SC1344

2SC945
2SC1318
2SA720

2SC1061

2SC1384

HA1452

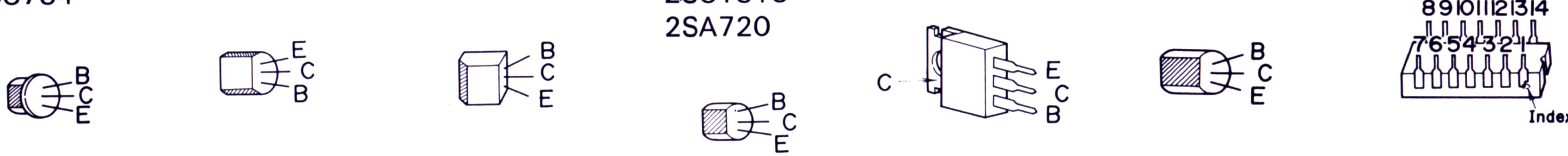

Symbol	Description			Part No.	
C46	Electrolytic	100	25V	CEA 101P 25	
C47	Electrolytic	3.3	50V	CEA 3R3P 50	
C48	Electrolytic	3.3	50V	CEA 3R3P 50	
C49	Ceramic	56p	50V	CCDSL 560K 50	
C50	Ceramic	56p	50V	CCDSL 560K 50	
C51	Electrolytic	100	6V	CEA 101P 6	
C52	Electrolytic	100	6V	CEA 101P 6	
C53	Electrolytic	22	25V	CEA 220P 25	
C54	Electrolytic	22	25V	CEA 220P 25	
C55	Ceramic	100p	50V	CCDSL 101K 50	
C56	Ceramic	100p	50V	CCDSL 101K 50	
C57	Electrolytic	2200	25V	CEA 222P 25	
C58	Electrolytic	2200	25V	CEA 222P 25	
C59	Mylar	0.1	50V	CQMA 104J 50	
C60	Mylar	0.1	50V	CQMA 104J 50	
C61	Electrolytic	220	35V	CEA 221P 35	
C62	Electrolytic	330	25V	CEA 331P 25	
C63	Electrolytic	10	50V	CEA 100P 50	
C64	Electrolytic	10	50V	CEA 100P 50	
C65	Electrolytic	4.7	35V	CEA 4R7P 35	
C66	Electrolytic	220	35V	CEA 221P 35	
C67	Electrolytic	220	50V	CEA 221P 50	
C68	Electrolytic	330	50V	CEA 331P 50	
C69	Electrolytic	3300	50V	ACH-049-0	
C70	Ceramic	0.01	150V	ACG-004-0	
C71	Ceramic	56p	50V	CCDSL 560K 50	
C72	Ceramic	56p	50V	CCDSL 560K 50	

RESISTORS

Symbol	Description		Part No.	
VR1	Variable resistor 100k-B1 (VOLUME)		ACV-142-0	
R1	Carbon film	75k	RD¼PS 753J	
R2	Carbon film	75k	RD¼PS 753J	
R3	Carbon film	82	RD¼PS 820J	
R4	Carbon film	82	RD¼PS 820J	
R5	Carbon film	56k	RD¼PS 563J	
R6	Carbon film	56k	RD¼PS 563J	
R7	Carbon film	2.2k	RD¼PS 222J	
R8	Carbon film	2.2k	RD¼PS 222J	
R9	Carbon film	220k	RD¼PS 224J	
R10	Carbon film	220k	RD¼PS 224J	
R11	Carbon film	75k	RD¼PS 753J	
R12	Carbon film	75k	RD¼PS 753J	
R13	Carbon film	1.8k	RD¼PS 182J	
R14	Carbon film	1.8k	RD¼PS 182J	
R15	Carbon film	470k	RD¼PS 474J	
R16	Carbon film	470k	RD¼PS 474J	
R17	Carbon film	39k	RD¼PS 393J	
R18	Carbon film	39k	RD¼PS 393J	
R19	Carbon film	510k	RD¼PS 514J	
R20	Carbon film	510k	RD¼PS 514J	

www.hifiengine.com

Symbol	Description		Part No.	
R21	Carbon film	6.8k	RD¼PS 682J	
R22	Carbon film	6.8k	RD¼PS 682J	
R23	Carbon film	12k	RD¼PS 123J	
R24	Carbon film	12k	RD¼PS 123J	
R25	Carbon film	390k	RD¼PS 394J	
R26	Carbon film	390k	RD¼PS 394J	
R27	Carbon film	100k	RD¼PS 104J	
R28	Carbon film	100k	RD¼PS 104J	
R29	Carbon film	560k	RD¼PS 564J	
R30	Carbon film	560k	RD¼PS 564J	
R31	Carbon film	1M	RD¼PS 105J	
R32	Carbon film	1M	RD¼PS 105J	
R33	Carbon film	1.5k	RD¼PS 152J	
R34	Carbon film	1.5k	RD¼PS 152J	
R35	Carbon film	12k	RD¼PS 123J	
R36	Carbon film	12k	RD¼PS 123J	
R37	Carbon film	3.9k	RD¼PS 392J	
R38	Carbon film	3.9k	RD¼PS 392J	
R39	Carbon film	10k	RD¼PS 103J	
R40	Carbon film	10k	RD¼PS 103J	
R41	Carbon film	6.8k	RD¼PS 682J	
R42	Carbon film	6.8k	RD¼PS 682J	
R43	Carbon film	5.1k	RD¼PS 512J	
R44	Carbon film	5.1k	RD¼PS 512J	
R45	Carbon film	100k	RD¼PS 104J	
R46	Carbon film	100k	RD¼PS 104J	
R47	Carbon film	2.2k	RD¼PS 222J	
R48	Carbon film	2.2k	RD¼PS 222J	
R49	Carbon film	100k	RD¼PS 104J	
R50	Carbon film	100k	RD¼PS 104J	
R51	Carbon film	1M	RD¼PS 105J	
R52	Carbon film	1M	RD¼PS 105J	
R53	Carbon film	110	RD¼PS 111J	
R54	Carbon film	110	RD¼PS 111J	
R55	Carbon film	4.7k	RD¼PS 472J	
R56	Carbon film	4.7k	RD¼PS 472J	
R57	Carbon film	6.8k	RD¼PS 682J	
R58	Carbon film	6.8k	RD¼PS 682J	
R59	Carbon film	4.7k	RD¼PS 472J	
R60	Carbon film	4.7k	RD¼PS 472J	
R61	Carbon film	68k	RD¼PS 683J	
R62	Carbon film	68k	RD¼PS 683J	
R63	Carbon film	150	RD¼PS 151J	
R64	Carbon film	150	RD¼PS 151J	
R65	Carbon film	18	RD¼PS 180J	
R66	Carbon film	18	RD¼PS 180J	
R67	Carbon film	56	RD¼PS 560J	
R68	Carbon film	56	RD¼PS 560J	
R69	Carbon film	15	RD¼PS 150J	
R70	Carbon film	15	RD¼PS 150J	

Continued on the Next Page

www.hifiengine.com

Symbol	Description			Part No.	
R71	Carbon film	4.7k		RD¼PS 472J	
R72	Carbon film	4.7k		RD¼PS 472J	
R73	Carbon film	1.5k		RD¼PS 152J	
R74	Carbon film	1.5k		RD¼PS 152J	
R75	Carbon film	12		RD¼PS 120J	
R76	Carbon film	12		RD¼PS 120J	
R77	Carbon film	220		RD¼PS 221J	
R78	Carbon film	220		RD¼PS 221J	
R79	Carbon film	220		RD¼PS 221J	
R80	Carbon film	220		RD¼PS 221J	
R81	Metal film	0.5	2W	RN2H 0R5K	
R82	Metal film	0.5	2W	RN2H 0R5K	
R83	Metal film	0.5	2W	RN2H 0R5K	
R84	Metal film	0.5	2W	RN2H 0R5K	
R85	Carbon film	15k		RD¼PS 153J	
R86	Carbon film	15k		RD¼PS 153J	
R87	Carbon film	33k		RD¼PS 333J	
R88	Carbon film	33k		RD¼PS 333J	
R89	Carbon film	10	½W	RD½PS 100J	
R90	Carbon film	10	½W	RD½PS 100J	
R91	Carbon film	150	½W	RD½PS 151J	
R92	Carbon film	150	½W	RD½PS 151J	
R93	Carbon film	240		RD¼PS 241J	
R94	Carbon film	3.3k		RD¼PS 332J	
R95	Carbon film	1k		RD¼PS 102J	
R96	Carbon film	1.2k		RD¼PS 122J	
R97	Carbon film	51k		RD¼PS 513J	
R98	Carbon film	150k		RD¼PS 154J	
R99	Carbon film	10k		RD¼PS 103J	
R100	Carbon film	1.2k		RD¼PS 122J	
R101	Carbon film	1.2k		RD¼PS 122J	
R102	Carbon film	47	½W	RD½PS 470J	
R103	Metal oxide film	220	1W	RS1P 221J ·	
R104	Carbon film	15k		RD¼PM 153J	
R105	Carbon film	15k		RD¼PM 153J	
R106	Carbon film	220		RD¼PM 221J	
R107	Carbon film	220		RD¼PM 221J	
R108	Carbon film	1k		RD¼PM 102J	
R109	Carbon film	1k		RD¼PM 102J	

SEMICONDUCTORS

Symbol	Description		Part No.	
Q1	IC	HA1452		
Q2	Transistor	2SC1312-G or F (2SC1344-D or E)		
Q3	Transistor	2SC1312-G or F (2SC1344-D or E)		

www.hifiengine.com

Symbol	Description		Part No.	
Q4	Transistor	2SC1312-G or F (2SC1344-D or E)		
Q5	Transistor	2SC1312-G or F (2SC1344-D or E)		
Q6	Transistor	2SC734-GR or Y (2SC1318-R, Q or S)		
Q7	Transistor	2SC734-GR or Y (2SC1318-R, Q or S)		
Q8	Transistor	2SC734-Y or O (2SC1318-R or S)		
Q9	Transistor	2SC734-Y or O (2SC1318-R or S)		
Q10	Transistor	2SA561-Y or O (2SA720-R, Q or S)		
Q11	Transistor	2SA561-Y or O (2SA720-R, Q or S)		
Q12	Transistor	2SC1061-B or C		
Q13	Transistor	2SC1061-B or C		
Q14	Transistor	2SC1061-B or C		
Q15	Transistor	2SC1061-B or C		
Q16	Transistor	2SC1384-R or Q		
Q17	Transistor	2SC945-R or Q		
D1	Varistor	STV-3H-G		
D2	Varistor	STV-3H-G		
D3	Diode	1S2473		
D4	Zener diode	WZ-320		
D5	Diode	SIB01-02 (1S1866)		
D6	Diode	SIB01-02 (1S1866)		
D7	Diode	SIB01-02 (1S1866)		
D8	Diode	SIB01-02 (1S1866)		
TH1	Thermistor	22D45		
TH2	Thermistor	22D45		

SWITCHES

Symbol	Description	Part No.	
S1	Rotary switch (FUNCTION)	ASD-019-0	
S2	Lever switch (TAPE MONITOR)	ASK-072-0	
S3	Lever switch (LOUDNESS)	ASK-069-0	

OTHERS

Symbol	Description	Part No.	
	Heat sink	ANH-224-0	
	Transistor socket	AKH-002-0	
	Insulating wafer	AEC-078-0	
	Insulating spacer	ANG-108-0	
	Fuse clip	AKR-013-0	
	Nut (9ϕ)	B71-004-0	
	Washer (t=1mm)	M45-086-0	

www.hifiengine.com

9.4 AF AMPLIFIER ASSEMBLY (AWK-041-0) FOR "GN" TYPE

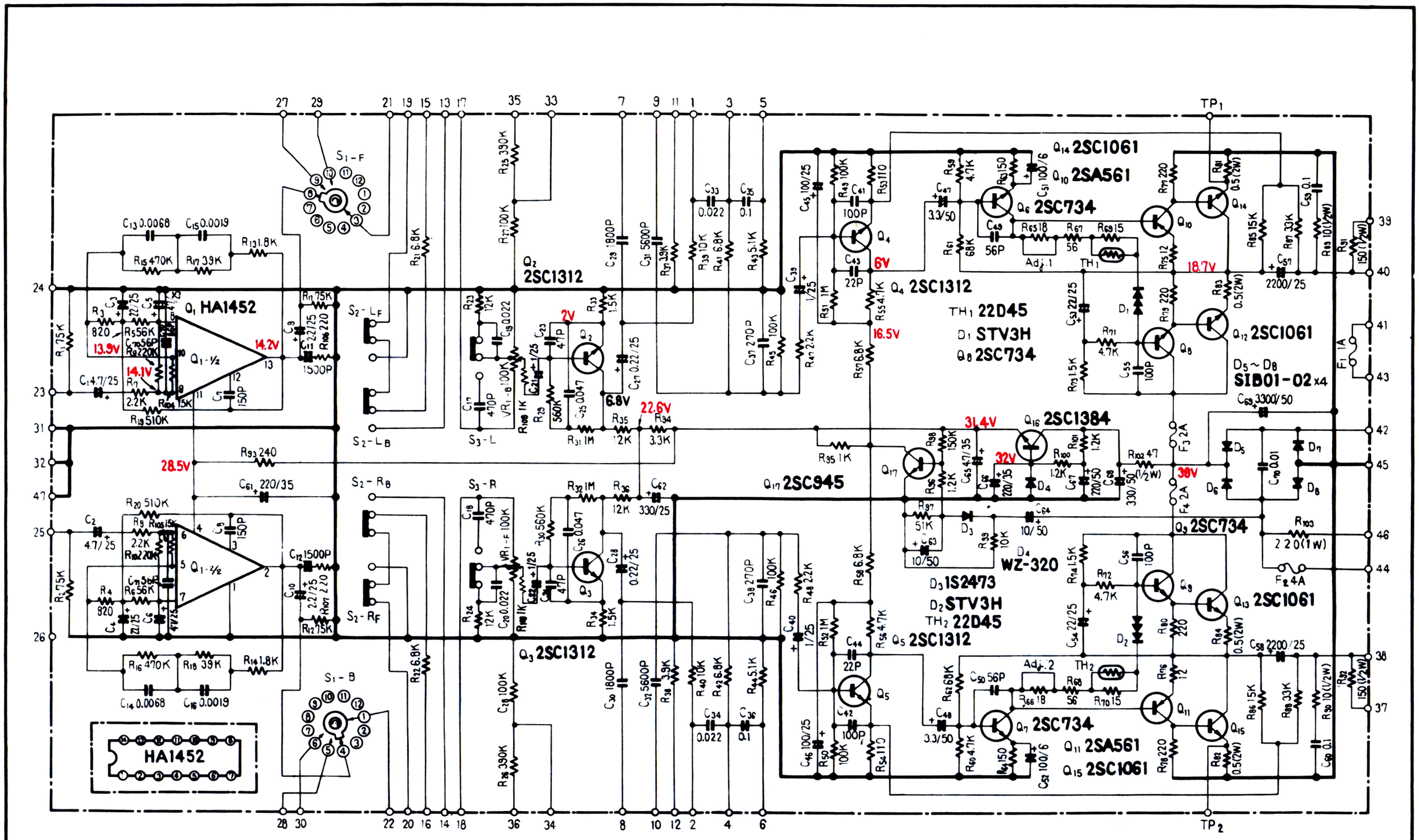

SWITCHES
- S_1 : FUNCTION
- S_2 : TAPE MONITOR
- S_3 : LOUDNESS

VR CONTROL
- VR_1 : VOLUME

Parts List of AF Amplifier Assembly (AWK-041-0)

CAPACITORS

Symbol	Description			Part No.	
C1	Electrolytic	4.7	25V	CSZA 4R7K 25	
C2	Electrolytic	4.7	25V	CSZA 4R7K 25	
C3	Electrolytic	22	25V	ACH-045-0	
C4	Electrolytic	22	25V	ACH-045-0	
C5	Electrolytic	47	25V	CEA 470P 25	
C6	Electrolytic	47	25V	CEA 470P 25	
C7	Ceramic	150p	50V	CCDSL 151K 50	
C8	Ceramic	150p	50V	CCDSL 151K 50	
C9	Electrolytic	2.2	25V	CSZA 2R2M 25	
C10	Electrolytic	2.2	25V	CSZA 2R2M 25	
C11	Ceramic	0.0015	50V	CKDYB 152K 50	
C12	Ceramic	0.0015	50V	CKDYB 152K 50	
C13	Styrol	0.0068	50V	CQSA 682J 50	
C14	Styrol	0.0068	50V	CQSA 682J 50	
C15	Styrol	0.0014	50V	CQSA 142J 50	
C16	Styrol	0.0014	50V	CQSA 142J 50	
C17	Ceramic	470p	50V	CKDYB 471K 50	
C18	Ceramic	470p	50V	CKDYB 471K 50	
C19	Ceramic	0.022	50V	CKDYF 223Z 50	
C20	Ceramic	0.022	50V	CKDYF 223Z 50	
C21	Electrolytic	1	25V	CSSA 010M 25	
C22	Electrolytic	1	25V	CSSA 010M 25	
C23	Ceramic	47p	50V	CCDSL 470K 50	
C24	Ceramic	47p	50V	CCDSL 470K 50	
C25	Ceramic	0.047	50V	CKDYF 473Z 50	
C26	Ceramic	0.047	50V	CKDYF 473Z 50	
C27	Electrolytic	0.22	25V	CSSA R22M 25	
C28	Electrolytic	0.22	25V	CSSA R22M 25	
C29	Ceramic	0.0018	50V	CKDYB 182K 50	
C30	Ceramic	0.0018	50V	CKDYB 182K 50	
C31	Ceramic	0.0056	50V	CKDYB 562K 50	
C32	Ceramic	0.0056	50V	CKDYB 562K 50	
C33	Mylar	0.022	50V	CQMA 223J 50	
C34	Mylar	0.022	50V	CQMA 223J 50	
C35	Mylar	0.1	50V	CQMA 104J 50	
C36	Mylar	0.1	50V	CQMA 104J 50	
C37	Ceramic	270p	50V	CCDSL 271K 50	
C38	Ceramic	270p	50V	CCDSL 271K 50	
C39	Electrolytic	1	25V	CSSA 010M 25	
C40	Electrolytic	1	25V	CSSA 010M 25	
C41	Ceramic	100p	50V	CCDSL 101K 50	
C42	Ceramic	100p	50V	CCDSL 101K 50	
C43	Ceramic	22p	50V	CCDSL 220K 50	
C44	Ceramic	22p	50V	CCDSL 220K 50	
C45	Electrolytic	100	25V	CEA 101P 25	

www.hifiengine.com

Foil Side

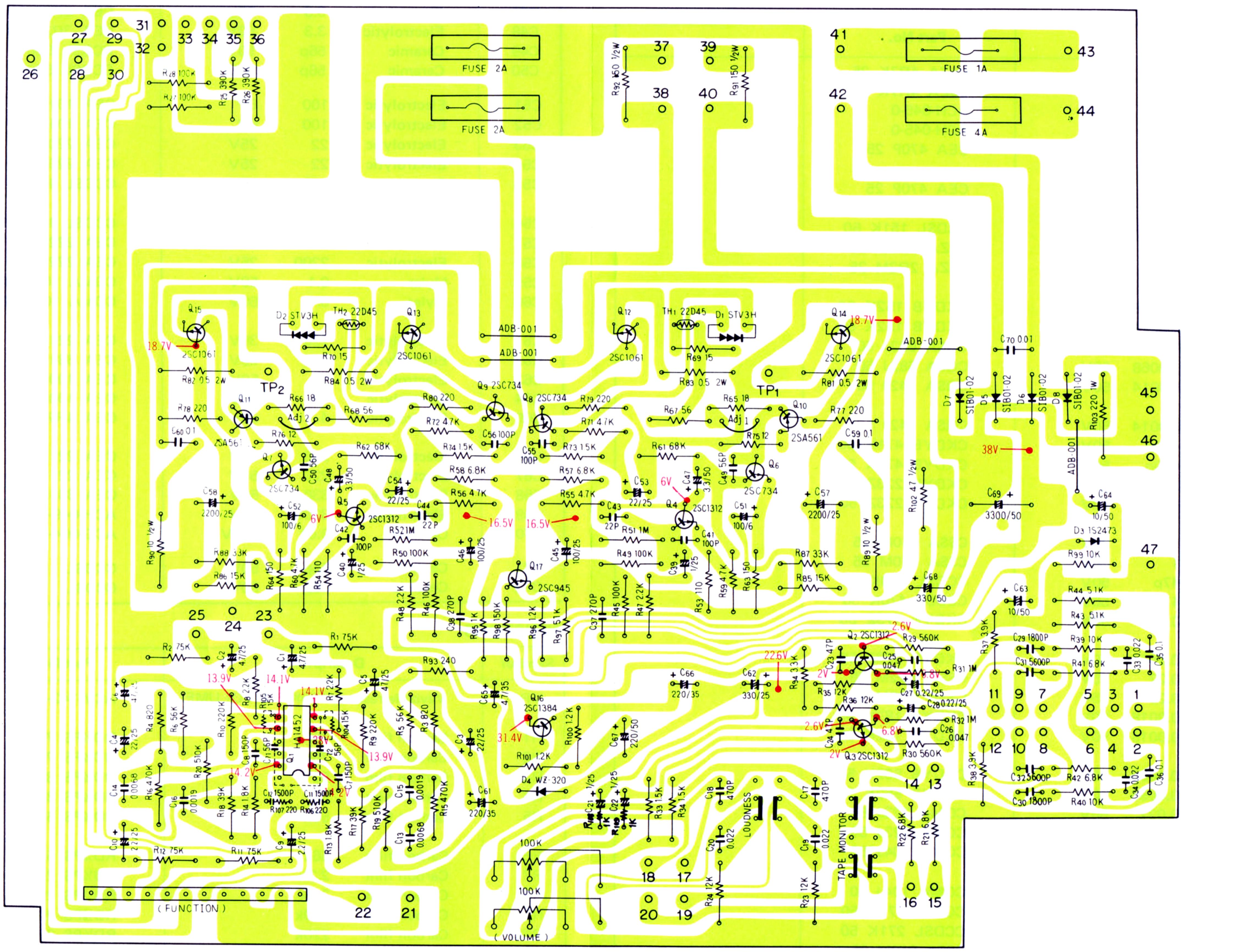

2SA561
2SC734

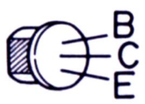

2SC1312

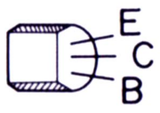

2SC1344

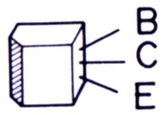

2SC945
2SC1318
2SA720

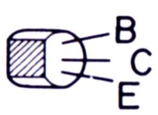

2SC1061

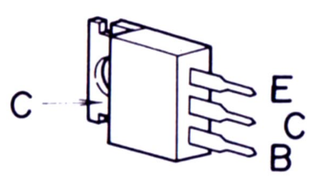

2SC1384

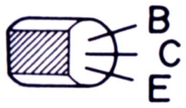

HA1452

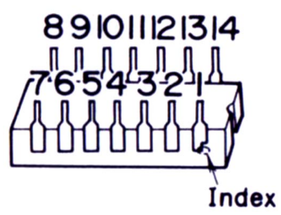

Symbol	Description			Part No.	
C46	Electrolytic	100	25V	CEA 101P 25	
C47	Electrolytic	3.3	50V	CEA 3R3P 50	
C48	Electrolytic	3.3	50V	CEA 3R3P 50	
C49	Ceramic	56p	50V	CCDSL 560K 50	
C50	Ceramic	56p	50V	CCDSL 560K 50	
C51	Electrolytic	100	6V	CEA 101P 6	
C52	Electrolytic	100	6V	CEA 101P 6	
C53	Electrolytic	22	25V	CEA 220P 25	
C54	Electrolytic	22	25V	CEA 220P 25	
C55	Ceramic	100p	50V	CCDSL 101K 50	
C56	Ceramic	100p	50V	CCDSL 101K 50	
C57	Electrolytic	2200	25V	CEA 222P 25	
C58	Electrolytic	2200	25V	CEA 222P 25	
C59	Mylar	0.1	50V	CQMA 104J 50	
C60	Mylar	0.1	50V	CQMA 104J 50	
C61	Electrolytic	220	35V	CEA 221P 35	
C62	Electrolytic	330	25V	CEA 331P 25	
C63	Electrolytic	10	50V	CEA 100P 50	
C64	Electrolytic	10	50V	CEA 100P 50	
C65	Electrolytic	4.7	35V	CEA 4R7P 35	
C66	Electrolytic	220	35V	CEA 221P 35	
C67	Electrolytic	220	50V	CEA 221P 50	
C68	Electrolytic	330	50V	CEA 331P 50	
C69	Electrolytic	3300	50V	ACH-049-0	
C70	Ceramic	0.01	150V	ACG-004-0	
C71	Ceramic	56p	50V	CCDSL 560K 50	
C72	Ceramic	56p	50V	CCDSL 560K 50	

RESISTORS

Symbol	Description		Part No.	
VR1	Vaviable resistor 100K-B 1(VOLUME)		ACV-142-0	
R1	Carbon film	75k	RD¼PS 753J	
R2	Carbon film	75k	RD¼PS 753J	
R3	Carbon film	82	RD¼PS 820J	
R4	Carbon film	82	RD¼PS 820J	
R5	Carbon film	56k	RD¼PS 563J	
R6	Carbon film	56k	RD¼PS 563J	
R7	Carbon film	2.2k	RD¼PS 222J	
R8	Carbon film	2.2k	RD¼PS 222J	
R9	Carbon film	220k	RD¼PS 224J	
R10	Carbon film	220k	RD¼PS 224J	
R11	Carbon film	75k	RD¼PS 753J	
R12	Carbon film	75k	RD¼PS 753J	
R13	Carbon film	1.8k	RD¼PS 182J	
R14	Carbon film	1.8k	RD¼PS 182J	
R15	Carbon film	470k	RD¼PS 474J	
R16	Carbon film	470k	RD¼PS 474J	
R17	Carbon film	39k	RD¼PS 393J	
R18	Carbon film	39k	RD¼PS 393J	
R19	Carbon film	510k	RD¼PS 514J	
R20	Carbon film	510k	RD¼PS 514J	

www.hifiengine.com

Symbol	Description		Part No.	
R21	Carbon film	6.8k	RD¼PS 682J	
R22	Carbon film	6.8k	RD¼PS 682J	
R23	Carbon film	12k	RD¼PS 123J	
R24	Carbon film	12k	RD¼PS 123J	
R25	Carbon film	390k	RD¼PS 394J	
R26	Carbon film	390k	RD¼PS 394J	
R27	Carbon film	100k	RD¼PS 104J	
R28	Carbon film	100k	RD¼PS 104J	
R29	Carbon film	560k	RD¼PS 564J	
R30	Carbon film	560k	RD¼PS 564J	
R31	Carbon film	1M	RD¼PS 105J	
R32	Carbon film	1M	RD¼PS 105J	
R33	Carbon film	1.5k	RD¼PS 152J	
R34	Carbon film	1.5k	RD¼PS 152J	
R35	Carbon film	12k	RD¼PS 123J	
R36	Carbon film	12k	RD¼PS 123J	
R37	Carbon film	3.9k	RD¼PS 392J	
R38	Carbon film	3.9k	RD¼PS 392J	
R39	Carbon film	10k	RD¼PS 103J	
R40	Carbon film	10k	RD¼PS 103J	
R41	Carbon film	6.8k	RD¼PS 682J	
R42	Carbon film	6.8k	RD¼PS 682J	
R43	Carbon film	5.1k	RD¼PS 512J	
R44	Carbon film	5.1k	RD¼PS 512J	
R45	Carbon film	100k	RD¼PS 104J	
R46	Carbon film	100k	RD¼PS 104J	
R47	Carbon film	2.2k	RD¼PS 222J	
R48	Carbon film	2.2k	RD¼PS 222J	
R49	Carbon film	100k	RD¼PS 104J	
R50	Carbon film	100k	RD¼PS 104J	
R51	Carbon film	1M	RD¼PS 105J	
R52	Carbon film	1M	RD¼PS 105J	
R53	Carbon film	110	RD¼PS 111J	
R54	Carbon film	110	RD¼PS 111J	
R55	Carbon film	4.7k	RD¼PS 472J	
R56	Carbon film	4.7k	RD¼PS 472J	
R57	Carbon film	6.8k	RD¼PS 682J	
R58	Carbon film	6.8k	RD¼PS 682J	
R59	Carbon film	4.7k	RD¼PS 472J	
R60	Carbon film	4.7k	RD¼PS 472J	
R61	Carbon film	68k	RD¼PS 683J	
R62	Carbon film	68k	RD¼PS 683J	
R63	Carbon film	150	RD¼PS 151J	
R64	Carbon film	150	RD¼PS 151J	
R65	Carbon film	18	RD¼PS 180J	
R66	Carbon film	18	RD¼PS 180J	
R67	Carbon film	56	RD¼PS 560J	
R68	Carbon film	56	RD¼PS 560J	
R69	Carbon film	15	RD¼PS 150J	
R70	Carbon film	15	RD¼PS 150J	

Continued on the Next Page

www.hifiengine.com

Symbol	Description			Part No.	
R71	Carbon film	4.7k		RD¼PS 472J	
R72	Carbon film	4.7k		RD¼PS 472J	
R73	Carbon film	1.5k		RD¼PS 152J	
R74	Carbon film	1.5k		RD¼PS 152J	
R75	Carbon film	12		RD¼PS 120J	
R76	Carbon film	12		RD¼PS 120J	
R77	Carbon film	220		RD¼PS 221J	
R78	Carbon film	220		RD¼PS 221J	
R79	Carbon film	220		RD¼PS 221J	
R80	Carbon film	220		RD¼PS 221J	
R81	Metal film	0.5	2W	RN2H 0R5K	
R82	Metal film	0.5	2W	RN2H 0R5K	
R83	Metal film	0.5	2W	RN2H 0R5K	
R84	Metal film	0.5	2W	RN2H 0R5K	
R85	Carbon film	15k		RD¼PS 153J	
R86	Carbon film	15k		RD¼PS 153J	
R87	Carbon film	33k		RD¼PS 333J	
R88	Carbon film	33k		RD¼PS 333J	
R89	Carbon film	10	½W	RD½PS 100J	
R90	Carbon film	10	½W	RD½PS 100J	
R91	Carbon film	150	½W	RD½PS 151J	
R92	Carbon film	150	½W	RD½PS 151J	
R93	Carbon film	240		RD¼PS 241J	
R94	Carbon film	3.3k		RD¼PS 332J	
R95	Carbon film	1k		RD¼PS 102J	
R96	Carbon film	1.2k		RD¼PS 122J	
R97	Carbon film	51k		RD¼PS 513J	
R98	Carbon film	150k		RD¼PS 154J	
R99	Carbon film	10k		RD¼PS 103J	
R100	Carbon film	1.2k		RD¼PS 122J	
R101	Carbon film	1.2k		RD¼PS 122J	
R102	Carbon film	47	½W	RD½PS 470J	
R103	Metal oxide film	220	1W	RS1P 221J	
R104	Carbon film	15k		RD¼PM 153J	
R105	Carbon film	15k		RD¼PM 153J	
R106	Carbon film	220		RD¼PM 221J	
R107	Carbon film	220		RD¼PM 221J	
R108	Carbon film	1k		RD¼PM 102J	
R109	Carbon film	1k		RD¼PM 102J	

SEMICONDUCTORS

Symbol	Description		Part No.	
Q1	IC	HA1452		
Q2	Transistor	2SC1312-G or F (2SC1344-D or E)		
Q3	Transistor	2SC1312-G or F (2SC1344-D or E)		

www.hifiengine.com

Symbol	Description		Part No.	
Q4	Transistor	2SC1312-G or F (2SC1344-D or E)		
Q5	Transistor	2SC1312-G or F (2SC1344-D or E)		
Q6	Transistor	2SC734-GR or Y (2SC1318-R, Q or S)		
Q7	Transistor	2SC734-GR or Y (2SC1318-R, Q or S)		
Q8	Transistor	2SC734-Y or O (2SC1318-R or S)		
Q9	Transistor	2SC734-Y or O (2SC1318-R or S)		
Q10	Transistor	2SA561-Y or O (2SA720-R, Q or S)		
Q11	Transistor	2SA561-Y or O (2SA720-R, Q or S)		
Q12	Transistor	2SC1061-B or C		
Q13	Transistor	2SC1061-B or C		
Q14	Transistor	2SC1061-B or C		
Q15	Transistor	2SC1061-B or C		
Q16	Transistor	2SC1384-R or Q		
Q17	Transistor	2SC945-R or Q		
D1	Varistor	STV-3H-G		
D2	Varistor	STV-3H-G		
D3	Diode	1S2473		
D4	Zener diode	WZ-320		
D5	Diode	SIB01-02 (1S1866)		
D6	Diode	SIB01-02 (1S1866)		
D7	Diode	SIB01-02 (1S1866)		
D8	Diode	SIB01-02 (1S1866)		
TH1	Thermistor	22D45		
TH2	Thermistor	22D45		

SWITCHES

Symbol	Description	Part No.	
S1	Rotary switch (FUNCTION)	ASD-019-0	
S2	Lever switch (TAPE MONITOR)	ASK-072-0	
S3	Lever switch (LOUDNESS)	ASK-069-0	

OTHERS

Symbol	Description	Part No.	
	Heat sink	ANH-224-0	
	Transistor socket	AKH-002-0	
	Insulating wafer	AEC-078-0	
	Insulating spacer	ANG-108-0	
	Fuse clip	AKR-010-0	
	Nut (9ϕ)	B71-004-0	
	Washer (t=1mm)	M45-086-0	

www.hifiengine.com

10. PACKING METHOD

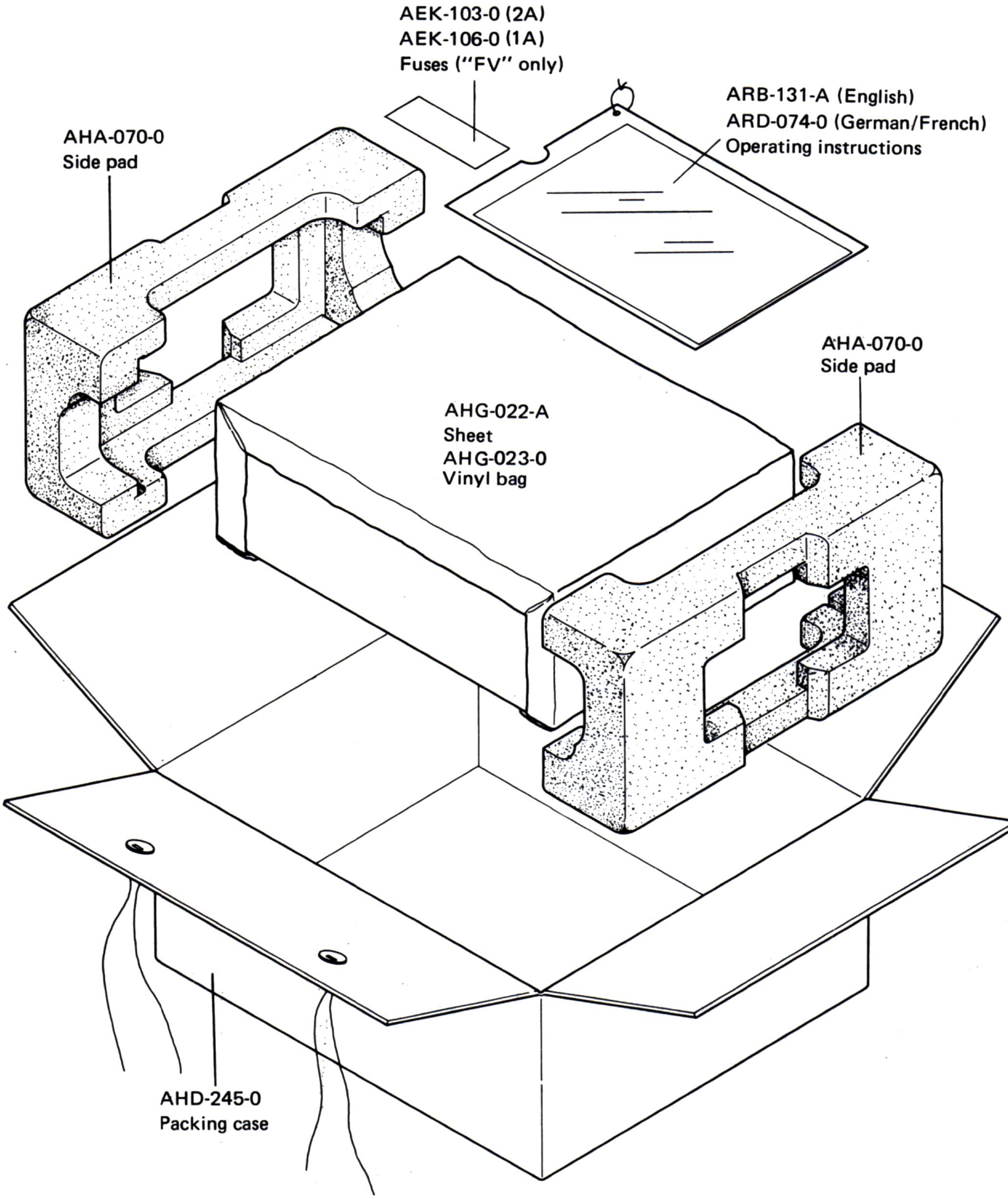

PIONEER ELECTRONIC CORPORATION
4-1, 1-Chome, Meguro, Meguro-ku, Tokyo 153, Japan
U.S. PIONEER ELECTRONICS CORPORATION
75 Oxford Drive, Moonachie, New Jersey 07074,U.S.A.
PIONEER ELECTRONIC (EUROPE) N.V.
Meir-Center Meir 21, 2000 Antwerp, Belgium
PIONEER ELECTRONICS AUSTRALIA PTY. LTD.
256-8 City Road, South Melbourne, Victoria 3205, Australia

© DEC. 1974

Printed in Japan

www.hifiengine.com